3 984 Programmable Logic Controllers and 800-Series Input/Output Modules

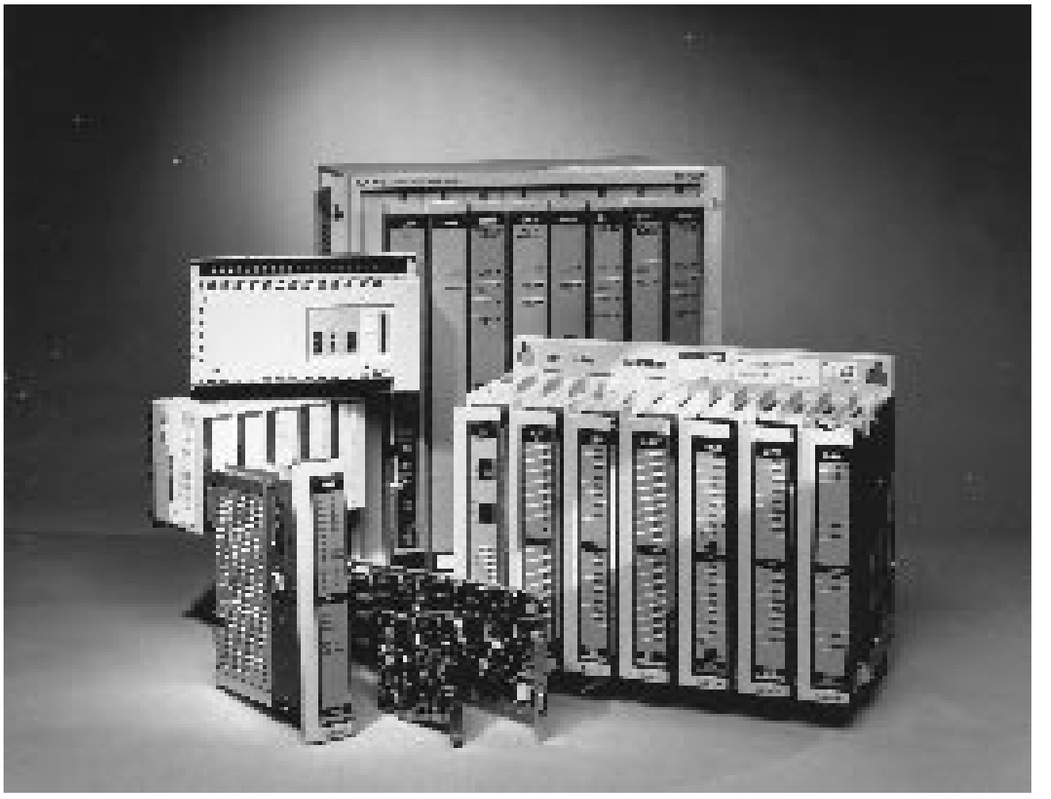

Company: Joyoung International Trading Co.,Limited
Attn：Smiling
Mobile/WhatsApp/Wechat:+86 18050035902
Email: info@htechplc.com
Website: https://www.joyoungintl.com/

Benefits of a Full Range, High Performance Family of PLCs

When selecting a PLC system to meet your automation strategy, you have three main goals:

1. Minimize investment to get your system up and running.

Many costs are not apparent during system specification, but appear in training, start-up, and upgrades. With a compatible family, you not only reduce costs, you speed system start-up, giving you a faster return on investment.

2. Minimize risk of obsolescence when your automation needs change.

Because 984 PLCs are a compatible family, you can upgrade the PLC without having to reprogram logic, rewire input/output systems, and retrain your personnel.

3. Maximize system performance.

High performance, high quality PLCs ensure high quality systems that efficiently produce high quality products.

The Modicon 984 Family helps achieve your goals by offering a full range of high performance, compatible control products. They are full range, providing control solutions for applications requiring 1.5k to 64k of logic memory and 256 to 16,384 discrete I/O points. They provide high performance: 984s solve logic faster than any other full range of programmable logic controllers. They are compatible: 984s share common I/O modules, base instruction sets, programmers, and programming software.

Family Compatibility

A family of compatible PLCs reduces some of the “hidden” costs of automating. These are the costs that really add up throughout the life cycle of your automation system — costs incurred when there are delays in training your staff, starting-up your system, or upgrading.

Reduce Training Costs

To implement a successful control system, programmers, control engineers, and installation personnel must thoroughly understand the system.

Training is necessary, but not always productive. Training costs accumulate when you consider the cost of initial training (courses and related expenses), time away from productive work, and the time it takes to become proficient.

With Schneider Automation's Modicon 984 Family, your personnel learn only one base instruction set, one system architecture, and one set of programming software. They apply the same skills to the full range of 984 sizes. They become experts at designing, programming, installing, and maintaining the system.

You invest in all the costs associated with training just once. This adds up to significant savings.

Speed System Start-up

Our 984 products have common features to help you save the time and money associated with designing, installing, programming, and debugging a new control system.

With the 984's software libraries, you program and debug commonly used functions once. Our software tools allow your engineers to develop libraries of programs for control, diagnostics, alarming, and recipe loading. You can easily incorporate these libraries into new systems, saving development and start-up time.

The quicker the start-up, the quicker you produce products, giving you a faster return on investment.

Easier System Upgrades

As your system grows, the control system must also grow. You may need to enhance the system to provide better diagnostics, improve report generation, or monitor and control more I/O. System growth requires more memory, more I/O or both, which can mean replacing the PLC, reprogramming the logic, and even replacing the I/O system.

All 984s share common software and base instruction sets.

If you need a larger 984 controller, you can load all or part of the existing program into the new 984. Then you install additional I/O, program additional logic, and your system is up and running.

Most 984s can accommodate growing memory requirements through modular memory upgrades. This feature eliminates some controller replacements, giving you significant savings when you must add memory to a system.

Thus, the 984 Family reduces your risk during initial system specification and reduces development time and equipment costs associated with upgrades.

Invest in the Family Concept Without Compromising Performance

An automation strategy built on a compatible family means you make the most of your investment. A strategy built on a high performance family means you operate at peak efficiency, with predictable control. Combine performance and compatibility and you produce higher quality products.

Here are some of the high-performance features of the Modicon 984 Family.

Fast Scan Optimizes Machine Throughput

With scans ranging from .75 ... 5 ms/k, our 984s solve logic faster than any other full family of PLCs. A high-speed remote I/O network communicates at 1.5 megabits per second. Fast logic solving and fast I/O servicing optimize machine or process throughput for better system performance.

Powerful Instructions Support Applications Throughout the Plant

The 984 has a powerful, full-function instruction set. Its enhanced instructions handle applications like machine control, process control, material handling, report generation, and diagnostics. Process Control Function Library (PCFL) firmware tool further expands the process control capabilities of the 984.

Versatile Software Speeds Development

Our Modsoft software allows you to program, edit, document, and archive 984 programs using a standard IBM compatible personal computer. On-line and off-line programming features include annotated listings, mnemonic programming, program merge, and more.

984 Functional Overview

How the Control System Works

Every 984 control system consists of a PLC linked to input and output modules on the shop floor. These I/O modules are wired to field sensing and switching devices, linking them directly to your application.

The 984 controls your application based on data received from the input/output modules connected to devices on the plant floor. Input modules accept electrical signals from field sensing devices and convert them into acceptable voltage levels for CPU processing. Output modules receive electrical signals from the CPU and convert them into voltage or current levels necessary to activate switching devices on the plant floor.

The 984's central processing unit solves user logic at very fast, regular intervals, making control predictable. The logic determines what actions to take, based on data received from the input modules. The resulting changes in output states are forwarded to the field.

System Memory

All 984 memory is based on CMOS technology with battery backup to maintain integrity during power loss. A Memory Protect switch on the controller prevents unauthorized alteration of the user program. Long-life lithium batteries support all memory for up to one year in case of power loss.

A 984 system has two types of memory: executive firmware and user logic.

Executive firmware resides in nonvolatile memory.

User logic, configuration data, and system status data reside in volatile Random Access Memory (RAM) backed up by batteries. User logic is your application; it's the custom logic you program to control your Application. You use configuration data to define system set-up; it resides in a data table. The input/output status is stored in state RAM. This representation of the current electrical status of the I/O devices is updated each time the PLC scans the user logic.

Software

All 984 PLCs may be programmed with ladder logic, a simple, intuitive, and graphic programming technique. Modicon adds more functionality to its programming in the form of special function blocks. These simple blocks take care of many of the complex programming tasks you require for your application including arithmetic, data transfer, matrix, and bit operations.

For more detailed information, Section 6 - Software .

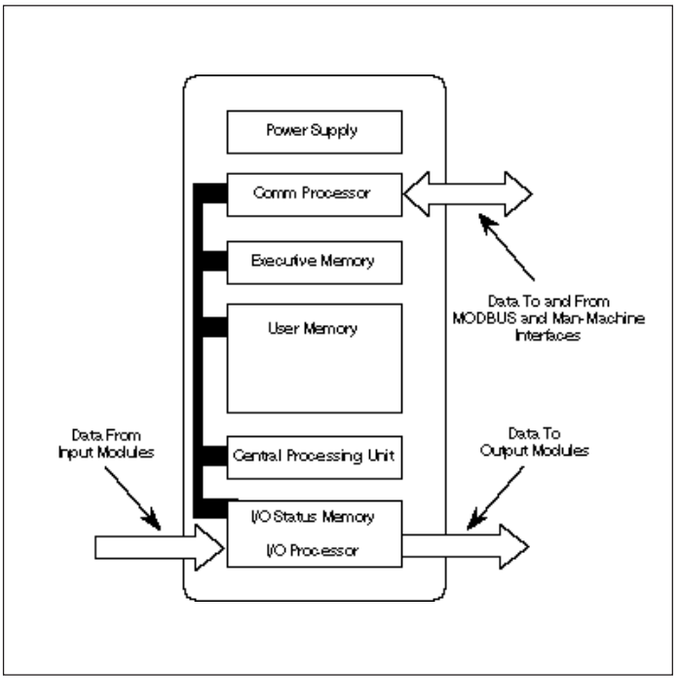

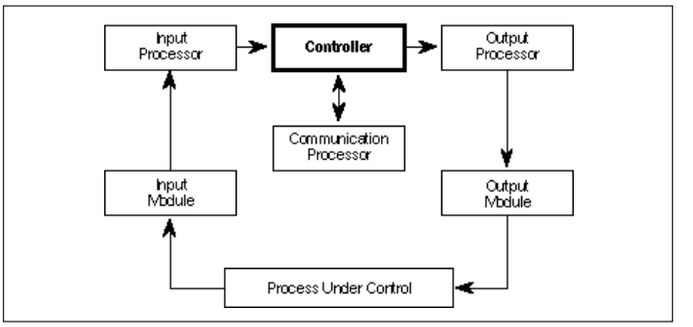

Input/Output Systems

The application logic that is stored in and solved by the PLC is implemented on the plant floor by input and output modules.

I/O modules are field-wired to sensing or switching devices and linked to the PLC over an I/O bus to create a complete control system.

I/O subsystems may be local — located together with or in close proximity to the PLC — or remote — located at distances up to 15,000 feet (4.5 km) from the PLC, depending on the cable type. Local I/O communicates to the PLC across a housing backplane or local cables. Up to 5 housings may be connected to any remote I/O drop. Remote I/O communicates through a remote I/O interface installed at each I/O location.

Communications

Peripheral devices, such as programming panels or host computers, may be connected directly to a 984 PLC through built-in Modbus ports, standard on every 984 PLC. Modbus is an RS 232 based communication protocol used for data acquisition, program editing, and archiving operations.

Most 984s include communication ports to link up to Modbus Plus. Modbus Plus is a peer-to-peer, token-bus network with a speed of one megabit per second. Modbus Plus supports data application and programming operations. For more information on communications, refer to the Section 7 - Networking.

Most 984 PLCs also have ports to support ASCII communications. For more information on ASCII communications, refer to the I/O portion of this Section.

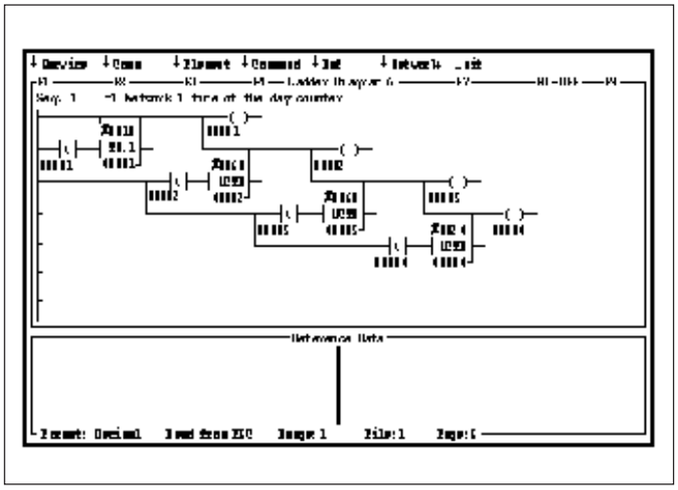

Ladder logic is a simple and intuitive language that offers power for some of the most complex functions.

Range of 984 Performance

Modicon 984 Family of Programmable Controllers

Controller	Type	User Memory	Data Memory	Discrete I/O Points (Max.)	Register I/O (Max.)	Local Drops	Local Housings	Remote Drops	Scan Time	Modbus Ports	Modbus-Plus Ports
PC-A984-120	Compact	1.5k	2k	256	32/32	1	4	0	5ms/k	1	0
PC-A984-130	Compact	4k	2k	256	32/32	1	4	0	5ms/k	1	0
PC-A984-131	Compact	4k	2k	256	32/32	1	4	0	5ms/k	2	0
PC-A984-141	Compact	8k	2k	256	32/32	1	4	0	5ms/k	2	0
PC-A984-145	Compact	8k	2k	256	32/32	1	4	0	5ms/k	1	1
PC-E984-241	Compact	8k	2k	256	32/32	1	4	0	2.5ms/k	2†	—
PC-E984-245	Compact	8k	2k	256	32/32	1	4	0	2.5ms/k	1†	1
PC-E984-251	Compact	16k	24k	256	32/32	1	4	0	2.5ms/k	2†	—
PC-E984-255	Compact	16k	24k	256	32/32	1	4	0	2.5ms/k	1†	1
PC-E984-381	Slot Mount	16k	2k	512	32/32	1	2	0	3ms/k	2	0
PC-E984-385	Slot Mount	16k	2k	512	32/32	1	2	0	3ms/k	1	1
PC-D984-385	Slot Mount	16k	2k	512	32/32	1	2	0	3ms/k	1	1
PC-E984-480	Slot Mount	16k	2k	2048	224/224	1	2	6	3ms/k	2	0
PC-K984-485	Slot Mount	16k	2k	2048	224/224	1	2	6	3ms/k	1	1
PC-E984-485	Slot Mount	16k	2k	2048	224/224	1	2	6	3ms/k	1	1
PC-E984-685	Slot Mount	16k	10k	8192/8192	1088/1088	1	5	16/31	1ms/k	2	1
PC-D984-785	Slot Mount	32/48k	64/32k	16384/16384	1088/1088	1	5	16/31	1ms/k	2	1
PC-K984-785	Slot Mount	32/48k	64/32k	16384/16384	1088/1088	1	5	16/31	1ms/k	2	1
PC-E984-785	Slot Mount	32/48k	64/32k	16384/16384	1088/1088	1	5	16/31	1ms/k	2	1
P1-984X-008	Chassis Mount	8k	2k	2048	224/224	1	5	6	.75ms/k	2	Optional
Px-984A-xxx	Chassis Mount	16/32k	2k	2048	2032	0	—	32	.75ms/k	3	Optional
Px-984B-xxx	Chassis Mount	32/64/128k	10k	8192/8192	2048/2048	0	—	32	.75ms/k	3	Optional
AM-0984-AT2	PC/AT bus	16k	2k	2048	224/224	0	—	7	1.5ms/k	0	*2
AM-0984-AT4	PC/AT & EISA	32k	32k	2048	1024/1024	0	—	16	1.5ms/k	0	*2
AM-0984-MC0	Micro Channel	16k	2k	3584/3584	224/224	0	—	7	1.5ms/k	0	1
AM-0984-VM0	VME bus	12k	10k	3584/3584	224/224	0	—	7	1.5ms/k	0	1
AM-0984-VM4	VME bus	32k	32k	16384/16384	1024/1024	0	—	16	1.5ms/k	0	*2

* Two redundant ports on one controller – one network.

† Supports XMIT block, Modbus Master

Optional Processors Increase Performance

Many 984 PLCs support option modules that further extend the flexibility and performance of your control system. The options available include networking with Modbus and Modbus Plus; support for distributed control and hot-standby configurations; and coprocessing.

The following chart identifies the options and the PLCs that support them.

Options

Model	Modbus	Modbus Plus	CoPro	Modbus Modem	Hot Standby	Modbus Plus Redundancy
PC-A984-120	X					
PC-A984-130	X					
PC-A984-131	X					
PC-A984-141	X					
PC-A984-145	X	X				
PC-E984-241	X					
PC-E984-245	X	X				
PC-E984-251	X					
PC-E984-255	X	X				
PC-E984-381	X			X		
PC-E984-385	X	X		X		
PC-D984-385	X	X		X		
PC-E984-480	X			X		
PC-K984-485	X	X		X		
PC-E984-485	X	X		X		
PC-E984-685	X	X	X	X	X	X
PC-D984-785	X	X	X	X	X	X
PC-K984-785	X	X	X	X	X	X
PC-E984-785	X	X	X	X	X	X
P1-984X-008	X	X	X	X	X	
Px-984A-xxx	X	X	X	X	X	
Px-984B-xxx	X	X	X	X	X	
AM-0984-AT2		X				X
AM-0984-AT4		X				X
AM-0984-MC0		X				
AM-0984-VM0		X				
AM-0984-VM4		X				X

Note: For information on the communication options, see the Communication Section. For information on remote input/output processing, see the section on Configuring A Remote I/O System in the 800 Series I/O section. For other options, see the appropriate PLC description.

984 Instruction Set

		Slot-Mount		Chassis-Mount	
Category	**Instructions**	**Included**	**Optional Loadables**	**Included**	**Optional Loadables**
Contacts	NO, NC, Pos Trans, Neg Trans	X		X	
Coils	Normal, Latch	X		X	
Timers	1.0, 0.1, 0.01 Sec	X		X	
Counters	Up/Down	X		X	
Arithmetic (4-digit)	Add, Sub, Mult, Div	X		X	
	Sq Root, Process Sq Root, Log, Anti-log	X			X
Arithmetic (Dbl Prec)	Add, Sub, Mult, Div	X			X
Arithmetic (Fl Pt)	Add, Sub, Mult, Div, Comp, Sq Root, Log, Natural Log, Exponential	X			
Trig	Sin, Cos, Tan, Arcsin, Arccos, Arctan	X			
Math Conv.	Fl Pt->Int, Int->Fl Pt, Deg->Rad, Deg->Rad, Change Sign	X			
Move	Reg->Table, Table->Reg, Table->Table, Block Move,	X		X	
	Search, First In, First Out				
	Table->Block, Block->Table	X			X
Subroutines	Jump to Sub, Lavel, Return	X			
Drum Sequencer	Drum, Input Compare		X		X
Matrix	And, Or, XOR, Somplement,	X		X	
	Compare				
Bit	Bit Modify, Bit Sense, Bit Rotate	X		X	
ASCII	Read, Write	X[1]		X	
Diagnostics	Status	X		X	
	Event Alarm Recording		X		X
Scan Ops	Skip Network(s), Constant Sweep,	X		X	
	Single Sweep, Segment Scheduler				
Other	PID	X			X
	Checksum	X[2]			X[2]
	Modbus Plus (MSTR)	X[3]			X[3]
	Custom Loadable		X		
Option Processor	Hot Standby (HSBY)		X[4]		X
Support	C996 DOS CoPro (CALL)		X[4]		
	C986 CoPro (CALL)				X
Process Control Function Library (PCFL)	A_IN, ALARM, A_OUT, AVER, CALC, EQN, DELAY, FNGEN, INTEG, LIMIT, L_LAG, LIM_V, MODE, ONOFF, PID, RAMP, RMPLN, RATE, SEL	X[5]			
16 Bit Math	TEST, AD16, SU16, MU16, DV16, ITOF, FTOI	X[5]			

1. Available in controllers which support remote I/O capability (984-48x, 685, 785)
2. Available in controllers without built-in Modbus Plus support
3. Available in controllers with built-in or optional Modbus Plus support (these controllers do not support Checksum function)
4. Available in controllers which support option processors (984-685, 785)
5. Available in the 685 and 785 only.

Category	Instructions	Compact		ModConnect	
		Included	Optional Loadables	Included	Optional Loadables
Contacts	NO, NC, Pos Trans,	X		X	
	Neg Trans				
Coils	Normal, Latch	X		X	
Timers	1.0, 0.1, 0.01 Sec	X		X	
Counters	Up/Down	X		X	
Arithmetic (4-digit)	Add, Sub, Mult, Div	X		X	
	Sq Root, Process Sq Root, Log, Anti-log	X		X	
Arithmetic (Dbl Prec)	Add, Sub, Mult, Div	X		X	
Arithmetic (Fl Pt)	Add, Sub, Mult, Div, Comp, Sq Root, Log, Natural Log, Exponential	X		X	
Trig	Sin, Cos, Tan, Arcsin, Arccos, Arctan	X		X	
Math Conv.	Fl Pt->Int, Int->Fl Pt, Deg->Rad, Rad->Deg, Change Sign	X		X	
Move	Reg->Table, Table->Reg, Table->Table, Block Move, Search,	X		X	
	First In, First Out				
	Table->Block,	X		X	
	Block->Table				
Subroutines	Jump to Sub, Lavel, Return	X		X	
Drum Sequencer	Drum, Input Compare		X		X
Matrix	And, Or, XOR, Complement, Compare	X		X	
Bit	Bit Modify, Bit Sense, Bit Rotate	X		X	
ASCII	Read, Write			X	
Diagnostics	Status	X		X	
	Event Alarm Recording		X		X
Scan Ops	Skip Network(s),	X		X	
	Constant Sweep,				
	Single Sweep,				
	Segment Scheduler				
Other	PID	X		X	
	Checksum	X[1]			
	Modbus Plus (MSTR)	X[2]		X	
	Custom Loadable		X		X
Option Processor Support	Hot Standby (HSBY)				
	C996 DOS CoPro (CALL)				
	C986 CoPro (CALL)				

1. Available in controllers without built-in Modbus Plus support
2. Available in controllers with built-in or optional Modbus Plus support (these controllers do not support Checksum function)

984 PLCs – Individual Product Descriptions

Wide-ranging Functionality and Physical Characteristics

Modicon 984 PLCs are designed as a compatible family, yet the individual products in the family offer a wide range of functionality and physical attributes. This means you can use the right PLC for the right job — no matter what the application.

The PLCs are available in three basic physical configurations: compact, chassis-mount, and slot-mount. For information on compact controllers and Micro and 984-120 Compact PLCs, see Section 2.

Slot-mount PLCs use an advanced microprocessor architecture that incorporates system and power components into single, compact modules. These modules mount in the primary 800-Series I/O subracks. They include the 984-38x series, 984-48x series, 984-685 series, and 984-785 series PLCs. These models cover small to large control applications with logic solve times ranging from 1.0 ... 5 milliseconds/K of user logic. Slot-mount PLCs are the perfect choice for small to large applications such as machine or process control.

Chassis-mount PLCs are housed in a rugged four or seven-slot chassis. These PLCs comprise a set of modular system boards that are individually installed in slots in the chassis. Chassis-mount PLCs include the 984A, 984B, and 984X models. These models cover mid-range to extra large control applications with high performance logic solve times of about 0.75 milliseconds/K of user logic.

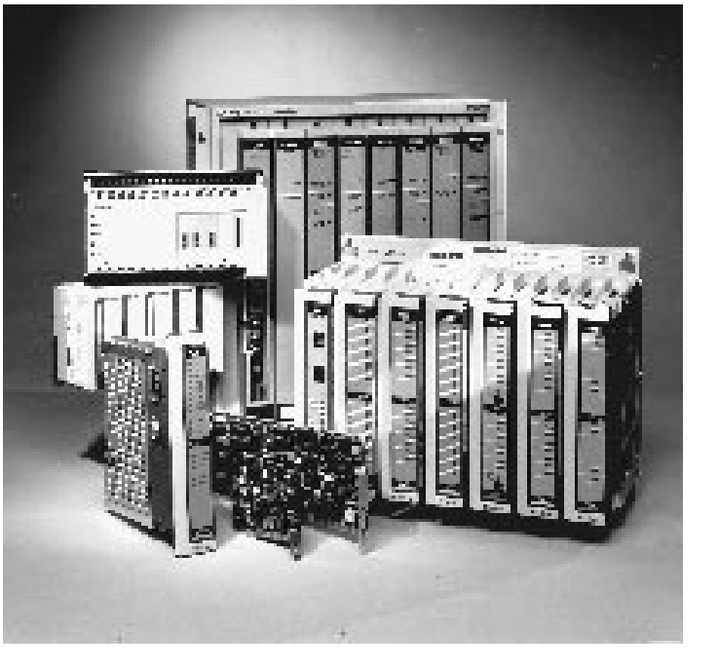

General 984 Environmental Specifications

Ambient Temperature	0 ... 60^{0}C 32 ... 140^{0}F
Humidity	0 ... 95% non-condensing
Shock	10 G's for 11 msec
Vibration	.625 @ 50-500 Hz
RFI/EMI Emission	Complies with applicable FCC requirements
RFI/EMI Susceptibility	ML-STD-461B CS02-Conducted RS03-Radiated
UL Listing	E54088
CSA Listing	LR32678

984 Slot-Mount PLCs

PLC Components

All Modicon slot-mount PLCs are designed for quick replacement. Every slot-mount PLC includes an integrated power supply, central processing unit, local I/O processor, and communication ports.

All slot-mount controllers include onboard executive and user memory.

Some slot mount PLCs support optional processors that further enhance the system functionality.

Hot Standby and Modbus Plus Redundancy

The 984-685 and 984-785 slot-mount PLCs support several option processing features that can increase the functionality and performance of your system.

If your application requires fault tolerance and high availability, you should consider adding the S911-800 Hot Standby module.

If you need multiple, independent Modbus Plus networks, you should consider the S985-800. This optional Modbus Plus module can also be used in redundant cable Modbus Plus configurations. This optional processor is further described in Section 7: Networking.

How to Choose the Right PLC

There are four series of 984 slot-mount PLCs. Each series is designed for specific input/output configurations and performance requirements:

Model	System Configuration and Functionality
984-38x	Local I/O only.
984-48x	Local I/O with built-in remote I/O.
984-685	Local I/O with optional remote I/O. Option processing. More memory
984-785	Local I/O with optional remote I/O. Option processing. Most memory.

Each series has several PLCs to choose from. Communication and performance features separate the different models. A higher number in the series indicates greater performance, both in communication functions and speed of logic solve.

Each series offers up to three types of communication features. The following chart shows the three options within each series and what type of application best fits the PLCs. (The 48x, 685, and 785 series have two or three communication ports).

Communication

Features	Applications
1 Modbus Port	RS 232-based communication network for communicating with programming panels, man/machine interfaces, and host computers.
2 Modbus Ports	RS 232-based communication network as above. Multiple ports allow simultaneous access to multiple hosts.
1 Modbus Port, 1 Modbus Plus Port **or:** 2 Modbus Ports, 1 Modbus Plus Port	Allows both RS 232-based communication (Modbus) and high speed, peer-to-peer networking between multiple PLCs, man machine interfaces, and host computers. Good for applications requiring high data throughput.

To decide which slot-mount PLC best fits your needs:

1. Choose the series that best fits your application's input/output configuration and memory requirements.

2. Pick a PLC within that series, based on communication and performance requirements.

If you need additional assistance, contact your local representative or distributor.

984-38x Series

The 984-38x series of PLCs is designed for small-to-mid-range local applications with up to two racks of local I/O holding up to 21 I/O modules.

There are three models in the 984-38x series: PC-E984-381, PC-E984-385, and PC-D984-385. They differ in their communication abilities and power supply voltage, as shown in the table below.

Each PLC includes onboard executive and user memory.

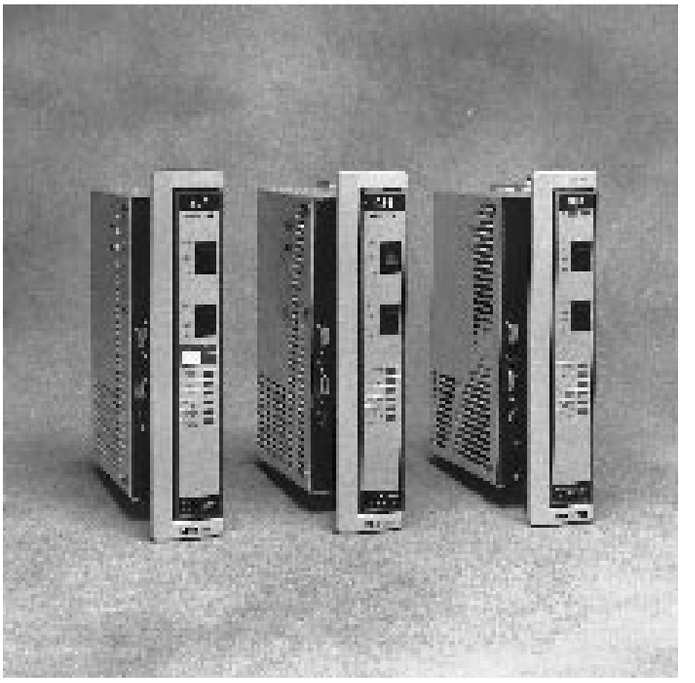

984-38x Differentiating Features

Model No.	1 Modbus Port	2 Modbus Ports	1 Modbus Plus Port	Time-of-Day Clock	Logic Solve Speed (ms/k)
PC-E984-381		√		√	3
PC-E984-385	√		√	√	3
PC-D984-385	√		√	√	3

Local I/O

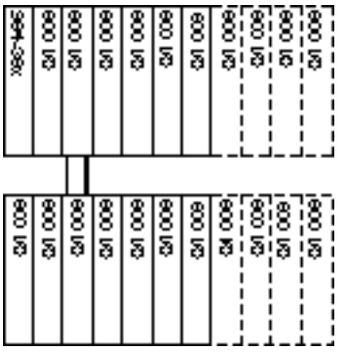

Up to Two Housings Max.

984-38x Series Technical Specifications

	PC-E984-381	PC-E984-385	PC-D984-385
Architecture			
Memory			
User logic	16k	16k	16k
Registers	1920	1920	1920
Total	18k	18k	18k
I/O Capacity			
Max. discrete I/O	512 any mix	512 any mix	512 any mix
Max. analog I/O	32 In/32 Out	32 In/32 Out	32 In/32 Out
Local I/O Capacity			
Total I/O bits	512 In/512 Out	512 In/512 Out	512 In/512 Out
Total I/O racks	2	2	2
Remote I/O Capacity	NA	NA	NA
Internal Coils			
(Includes Disc I/O)	2048	2048	2048
Performance	3 ms/k	3 ms/k	3 ms/k
Communication ports	2 Modbus	1 Modbus 1 Modbus Plus	1 Modbus 1 Modbus Plus
Electrical			
Power Supply			
Input voltage	115 Vac 230 Vac 24 Vdc	115 Vac 230 Vac 24 Vdc	125 Vdc 24 Vdc
I/O power capacity	3 amps	3 amps	3 amps
Environmental			
Temperature	0 ... 60˚C	0 ... 60˚C	0 ... 60˚C
Humidity	0 ... 95%	0 ... 95%	0 ... 95%
Shock resistance	10G (11 ms)	10G (11 ms)	10G (11 ms)
Physical			
Dimensions			
W x H x D	2.54 x 10.5 x 8 in (39.4 x 266 x 203 mm)	2.54 x 10.5 x 8 in (39.4 x 266 x 203mm)	2.54 x 10.5 x 8 in (39.4 x 266 x 203mm)
Space Requirements	Slot 1 in H8xx-20x	Slot 1 in H8xx-20x	Slot 1 in H8xx-20x

984-48x Series

The 984-48x PLCs are designed for small-to-mid-range, local and remote applications. They support two racks of local 800-Series I/O and up to six drops of remote I/O.

The ability to communicate to remote I/O is facilitated by the S908 communications network, a functionality which is built into the mainframe. This feature supports a single cable with up to six drops of remote I/O.

There are three models in the 984-48x series, the PC-E984-480, PC-K984-485, and PC-E984-485. They differ in their communication abilities and support for a key switch, as shown in the table below.

Each PLC includes onboard executive and user memory.

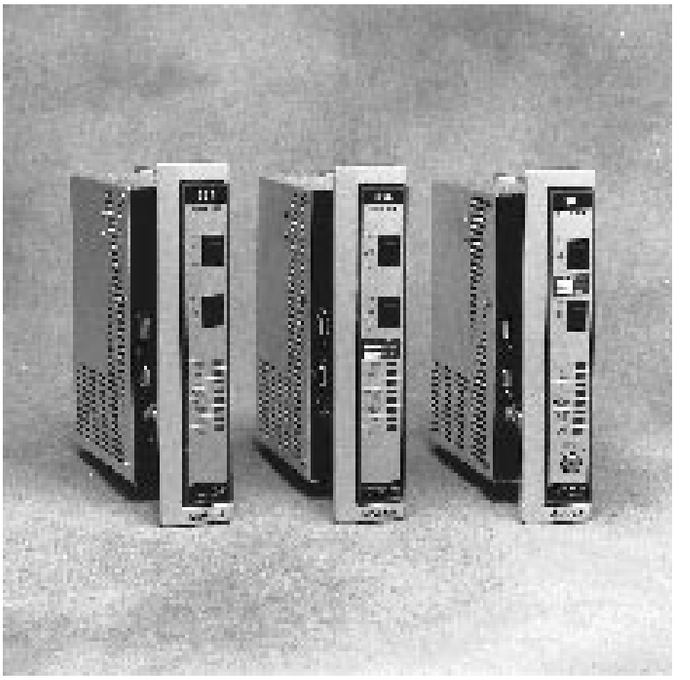

984-48x Differentiating Features

Model No	1 Modbus Port	2 Modbus Ports	1 Modbus Plus Port	Logic Solve Speed (ms/k)	Key Switch
PC-E984-480		√		3	
PC-K984-485	√		√	3	√
PC-E984-485	√		√	3	

Local I/O

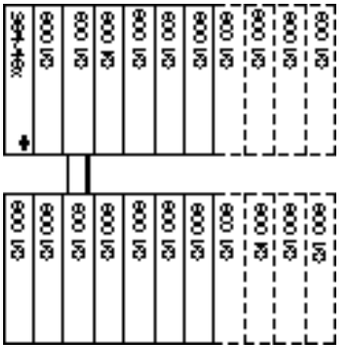

Up to Two Housings Max.

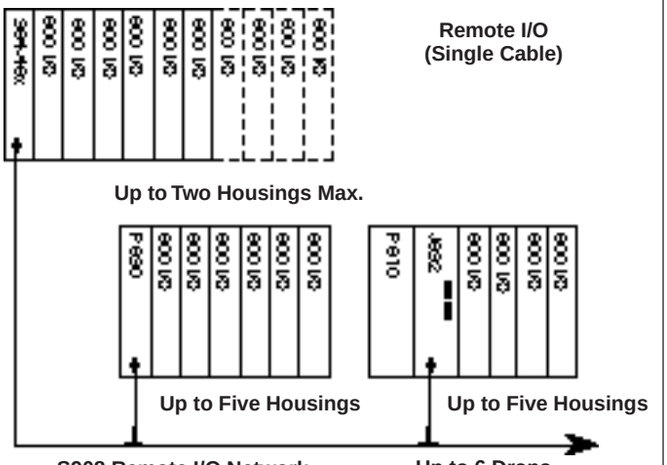

984-48x Technical Specifications

	PC-E984-480	PC-K984-485	PC-E984-485
Architecture			
Memory			
User logic	16k	16k	16k
Registers	1920	1920	1920
Total	18k	18k	18k
I/O Capacity			
Max. discrete I/O	2048 any mix	2048 any mix	2048 any mix
Max. analog I/O	224 In/224 Out	224 In/224 Out	224 In/224 Out
Local I/O Capacity			
Total I/O bits	512 In/512 Out	512 In/512 Out	512 In/512 Out
Total I/O racks	2	2	2
Remote I/O Capacity			
Max. I/O bits per drop	512 In/512 Out	512 In/512 Out	512 In/512 Out
Max. # drops	6	6	6
Total I/O bits	3584 In/ 3584 Out	3584 In/ 3584 Out	3584 In/ 3584 Out
Max. # ASCII ports	12	12	12
Internal Coils (Includes Disc. I/O)	2048	2048	2048
Performance	3 ms/k	3 ms/k	3 ms/k
Communication ports	2 Modbus	1 Modbus 1 Modbus Plus	1 Modbus 1 Modbus Plus
Key Switch	No	Yes	No
Electrical			
Power Supply			
Input voltage	115 Vac 230 Vac 24 Vdc	115 Vac 230 Vac 24 Vdc	115 Vac 230 Vac 24 Vdc
I/O power capacity	3 amps	3 amps	3 amps
Environmental			
Temperature	0 ... 60°C	0 ... 60°C	0 ... 60°C
Humidity	0 ... 95%	0 ... 95%	0 ... 95%
Shock resistance	10 G (11 ms)	10 G (11 ms)	10 G (11 ms)
Physical			
Dimensions			
W x H x D	2.54 x 10.5 x 8 in (39.4 x 266 x 203 mm)	2.54 x 10.5 x 8 in (39.4 x 266 x 203 mm)	2.54 x 10.5 x 8 in (39.4 x 266 x 203 mm)
Space Requirements	Slot 1 in H8xx-20x housing	Slot 1 in H8xx-20x housing	Slot 1 in H8xx-20x
Weight	6.6 lbs (3.0 kg)	6.6 lbs (3.0 kg)	6.6 lbs (3.0 kg)

984-685

The 984-685 PLC handles mid-range to large applications. It supports five racks of local 800 series I/O and up to 31 drops of remote I/O. For remote I/O, an optional S908 processor is required. The S908 processor supports either single or redundant cable configurations. If you are configuring a remote I/O system, you must also add an S908 Remote I/O Processor (Part No. AS-S908-110 or AS-S908-120 for single/dual cable configurations) and a remote I/O Executive Cartridge (Part # AS-E908-016 or AS-E908-031).

The 984-685 supports the S911-800 Hot Standby optional processor that increases the performance and functionality of your system.

The 984-685 includes onboard executive and user memory.

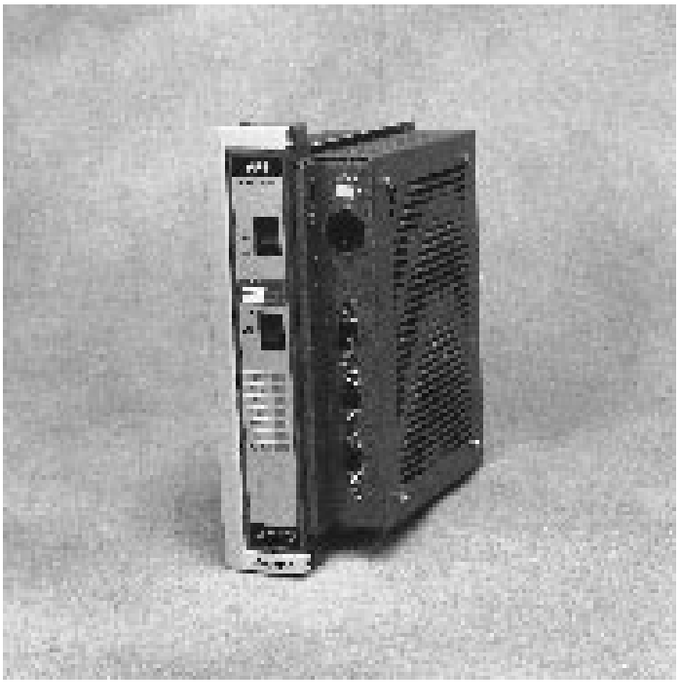

984-685 Differentiating Features

Model No	1 Modbus Port	2 Modbus Ports	1 Modbus Plus Port	Logic Solve Speed (ms/k)
PC-E984-685		√	√	1

Local I/O

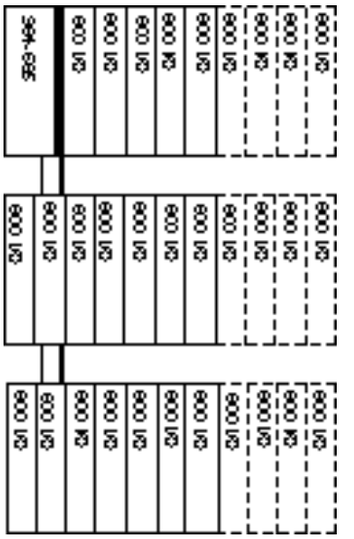

Up to Five Housings Max.

984-685 Technical Specifications

PC-E984-685

Architecture

Memory	
User logic	16k
Registers	9999
Total	26k
I/O Capacity	
Max. Discrete I/O	8192 In/8192 Out
Max. Analog I/O	1088 In/1088 Out
Local I/O Capacity	
Total I/O Bits	1024 In/1024 Out
Total I/O Racks	5
Remote I/O Capacity	
Max. I/O Bits per Drop	512 In/512 Out or 1024 In/1024 Out
Max. # Drops	31 16
Total I/O Bits	16,384
Max. # ASCII Ports	32
Internal Coils (Includes Disc. I/O)	8192
Performance	1 ms/k
Communication Ports	2 Modbus 1 Modbus Plus

Electrical

Power Supply	
Input Voltage	115 Vac 230 Vac 24 Vdc
I/O Power Capacity	8 amps

Environmental

Temperature	0 ... 60°C
Humidity	0 ... 95%
Shock Resistance	10 G (11 ms)

Physical

Dimensions	
W x H x D (39.4 x 266 x 203 mm)	2.54 x 10.5 x 8 in
Space Requirements	Slots 1 and 2 in H8xx-209 housing
Weight	8.6 lbs (3.6 kg)

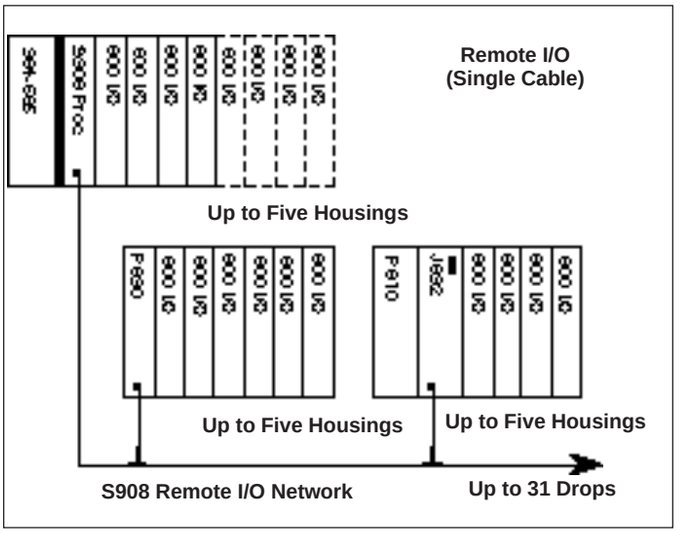

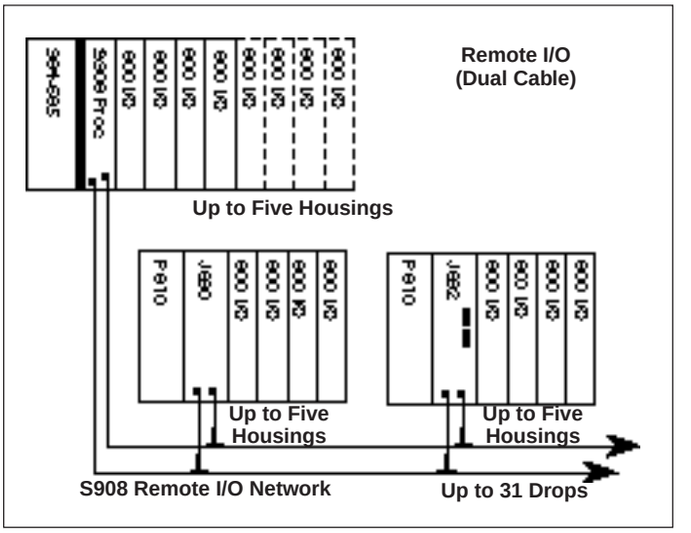

984-785 Series

The most powerful of Modicon slot-mount PLCs, the 984-785 series, handles mid-range to large applications. For remote I/O, an optional S908 processor is required. The S908 processor supports either single or redundant cable configurations. If you are configuring a remote I/O system, you must also add an S908 Remote I/O Processor (Part # AS-S908-110 or AS-S908-120 for single/dual cable configurations) and a Remote I/O cartridge (Part # AS-E908-131 or AS-E908-016).

The 984-785 series supports the S911-800 Hot Standby optional processor which increases the performance and functionality of your system.

The three models in the series, the PC-D984-785, PC-K984-785, and the PC-E984-785, differ in their power requirements and support for a key switch, as indicated in the following table.

A 785 series upgrade kit is available to support a 16 drop Quantum I/O, S908 network.

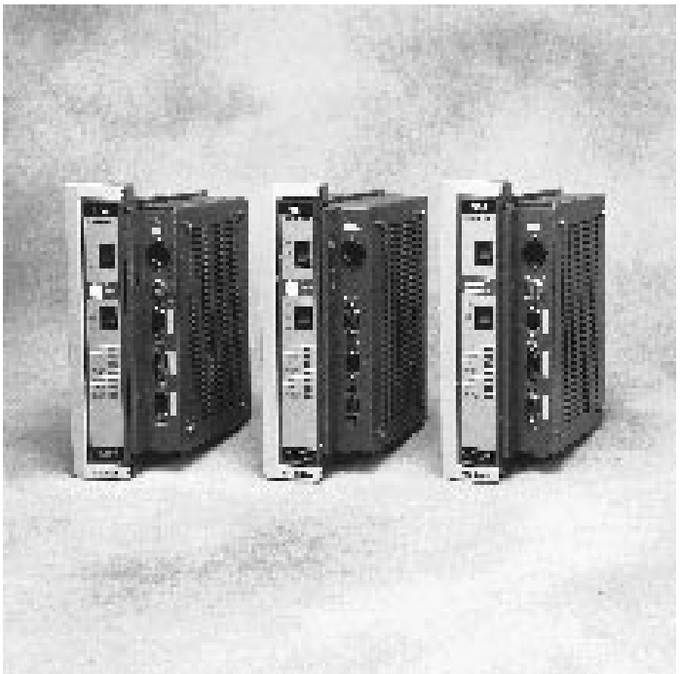

984-785 Differentiating Features

Model No.	2 Modbus Ports	1 Modbus Plus Port	Key Switch
PC-D984-785	√	√	√
PC-K984-785	√	√	√
PC-E984-785	√	√	

Local I/O

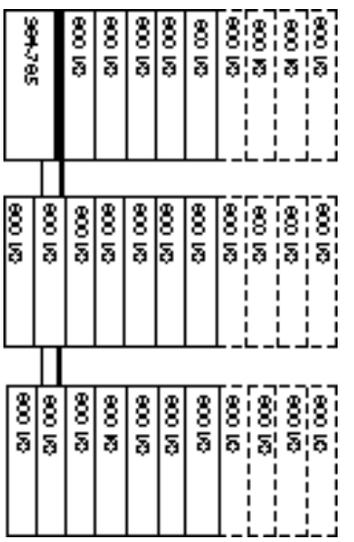

Up to Five Housings Max.

984-785 Technical Specifications*

	PC-D984-785		PC-K984-785		PC-E984-785	
Architecture						
Memory						
User Logic	32k	48k	32k	48k	32k	48k
Registers	64k	32k	64k	32k	64k	32k
Extended Memory	96k	24k	96k	24k	96k	24k
Total	192k	104k	192k	104k	192k	104k
I/O Capacity						
Max. Discrete I/O	16384 In/16384 Out		16384 In/16384 Out		16384 In/16384 Out	
Max. Analog I/O	1088 In/1088 Out		1088 In/1088 Out		1088 In/1088 Out	
Local I/O Capacity						
Total I/O Bits	1024 In/1024 Out		1024 In/1024 Out		1024 In/1024 Out	
Total I/O Racks	5		5		5	
Remote I/O Capacity						
Max. I/O Bits per Drop	512 In/512 Out or 1024 In/1024 Out		512 In/512 Out or 1024 In/1024 Out		512 In/512 Out or 1024 In/1024 Out	
Max. # Drops	31	16	31	16	31	16
Total I/O Bits	65535 any mix		65535 any mix		65535 any mix	
Max. # ASCII Ports	32		32		32	
Internal Coils (Includes Disc. I/O)	65535		65535		65535	
Performance	1 ms/k		1 ms/k		1 ms/k	
Communication Ports	2 Modbus 1 Modbus Plus		2 Modbus 1 Modbus Plus		2 Modbus 1 Modbus Plus	
Key Switch	Yes		Yes		No	
Electrical						
Power Supply						
Input Voltage		125 Vdc	115 Vac 230 Vac		115 Vac 230 Vac	
	24 Vdc		24 Vdc		24 Vdc	
I/O power capacity	8 amps	7 amps	8 amps		8 amps	
Environmental						
Temperature	0 ... 60°C		0 ... 60°C		0 ... 60°C	
Humidity	0 ... 95%		0 ... 95%		0 ... 95%	
Shock Resistance	10 G (11 ms)		10 G (11 ms)		10 G (11 ms)	
Physical						
Dimensions, W x H x D	2.54 x 10.5 x 8 in (39.4 x 266 x 203 mm)		2.54 x 10.5 x 8 in (39.4 x 266 x 203 mm)		2.54 x 10.5 x 8 in (39.4 x 266 x 203 mm)	
Space Requirements	Slots 1 and 2 in H8xx-209 housing		Slots 1 and 2 in H8xx-209 housing		Slots 1 and 2 in H8xx-209 housing	
Weight	8.6 lbs (3.6 kg)		8.6 lbs (3.6 kg)		8.6 lbs (3.6 kg)	

* A 785 upgrade kit (AM-E785-QK0) is available for 16 drop Quantum I/O, S908 network. See the S908 section on page 2-22 for details.

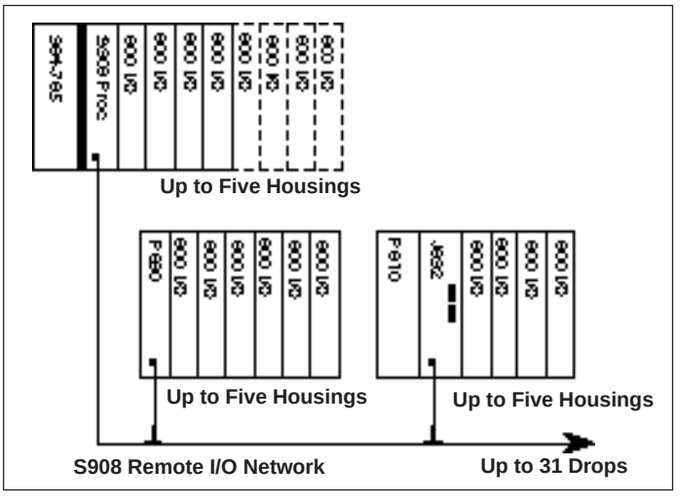

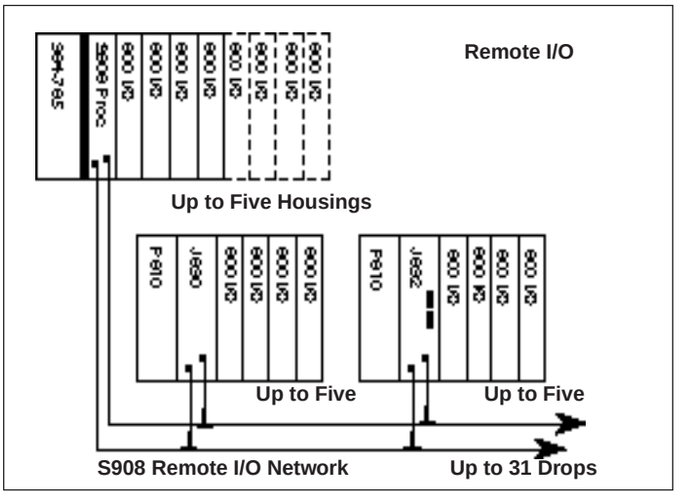

S908 Remote I/O Processor

Remote I/O is the portion of the controller's I/O that is typically installed away from the PLC housing and that requires an interface module to communicate with the I/O processor at the CPU. Communication to the primary housing at each drop is accomplished through coaxial cable. A remote I/O system may consist of single or multiple housings at each drop.

The S908 Remote I/O Processor Option Module provides remote I/O capability to the 984-685/785 controller lines. Using the S908 Remote I/O Processor, these controllers can address up to 31 remote drops of 800-Series I/O. In addition, each drop can support two ASCII communication ports (maximum of 32 ports available). S908 processors are available with either one or two coaxial cable connectors for single or dual cable configurations.

Use of the S908 Remote I/O Processor requires installation of an AS-E908-131 or AS-E908-016 plug-in executive cartridge.

The E908-131 supports 31 remote I/O drops with 512 bits in and 512 bits out per drop. The E908-016 supports 16 remote I/O drops with 1024 bits in and 1024 bits out per drop.

The S908 Remote I/O Processor occupies one option slot in a 984-685/785 controller.

A 785 upgrade kit is available to support a 16 drop Quantum I/O S908 network. The AM-E785-QK0 kit includes:

785 downloadable executive, #SW-E785-Q00
S908 16 drop cartridge, #AS-Q908-016

This 785 upgrade kit supports up to 16 drops of 800-Series I/O and Quantum I/O. Each drop must be either 800-Series I/O or Quantum I/O. A combination of 800-Series I/O and Quantum I/O is not supported within a drop. The local drop supports only 800-Series I/O. Modsoft 2.2 or greater is required to utilize the features of the AM-E785-QKO kit.

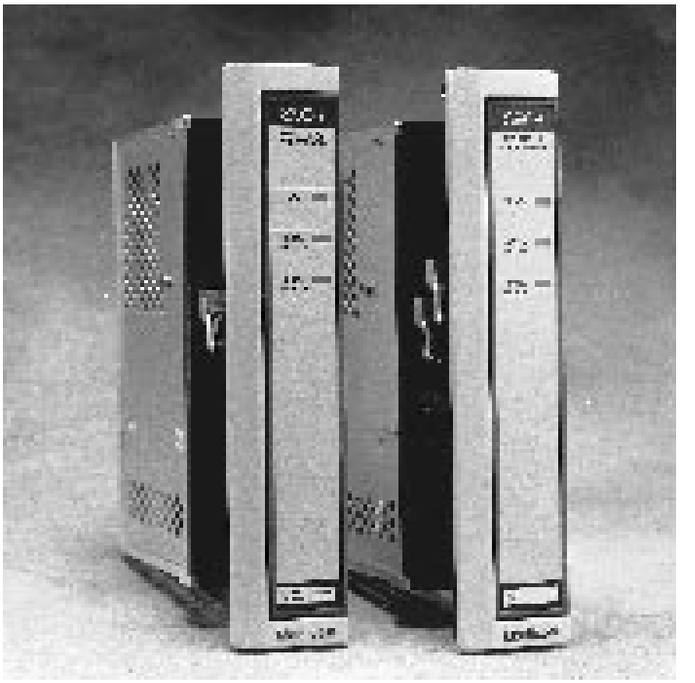

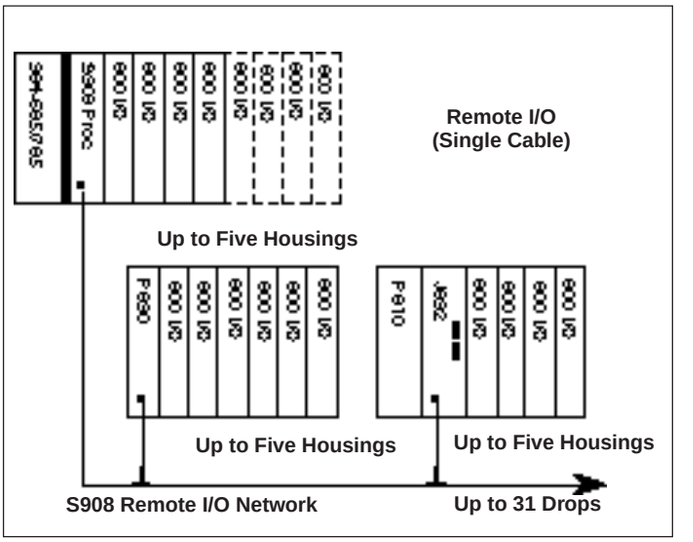

S908 Technical Specifications

Part Number	
AS-S908-110	Remote I/O Processor, Single Cable
AS-S908-120	Remote I/O Processor, Dual Cable
AS-E908-131	Executive Cartridge, 31 drops, 512 bits in and out per drop
AS-E908-016	Executive Cartridge, 16 drops, 1024 bits in and out per drop
AM-E785-QK0	785 upgrade kit to support 16 drop Quantum S908 network. AM-E785-QK0 includes: SW-E785-Q00 785 Executive Software; AS-Q908-016 S908 Cartridge to support 16 800-Series I/O and Quantum I/O drops. Modsoft 2.2 or greater required.
Configuration Information	
Supervisory PLCs	984-685/785
Communication Rate	1.5 Mbit/s
Ports	
S908-110	One F-type coaxial
S908-120	Two F-type coaxial
Power Supply	
Power Supply	984-685, 785
Power Draw	
+5.0 Vdc	1500 mA
+4.3 Vdc	0 mA
-5.0 Vdc	0 mA
Environmental	
Operating Temperature	0 ... 60°C
Relative Humidity	0 ... 95% non-condensing
Shock Resistance	10G (11 ms)
Space requirements	1 option slot in H8xx-209 subrack
Weight	2 lbs (.9 kg)

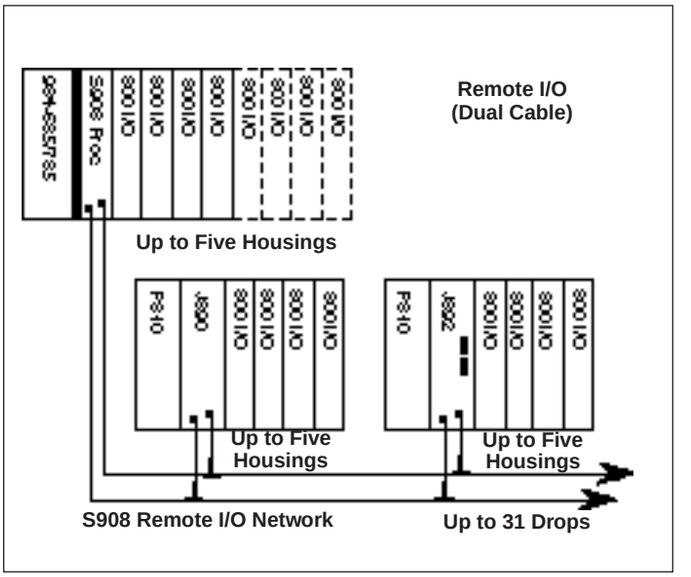

S911-800 Hot Standby Systems For Slot-Mount PLCs

If your application requires fault tolerance and high availability, consider the hot standby option, available on 984-685 and 785 PLCs.

A hot standby system provides backup control in case of a failure. Two identically-configured 984 PLCs communicate with each other via S911 Hot Standby Modules located in each PLC. Each PLC also has a loadable hot standby instruction block (HSBY), programmed into its user logic, which communicates status information between the two PLCs.

One of the PLCs in the hot standby system operates as the primary PLC. It reads input data from the remote input/output drops, executes ladder logic, and sends output commands back to the drops. The primary PLC continuously updates the standby PLC with system status information at the end of each logic solve.

In normal conditions, the standby PLC does not perform control functions; it merely processes status information. However, if the primary PLC fails, the standby PLC assumes primary control functions within 48 milliseconds of the failure.

To configure an S911 Hot Standby System, you need, in addition to PLCs and input/output drops:

- S911 Hot Standby Processors in each PLC
- S908 Remote Input/Output Processors in each PLC
- W911 cable (in 6 ft., 12 ft., or 30 ft. lengths)
- Redundancy terminator kit
- Two 75 ohm self-terminating connectors
- One MA-0186-000 coaxial line splitter

Ordering Information

For ordering Hot Standby systems, single part numbers are available combining appropriate components:

- Two S911 Processor Boards
- One W911 Cable
- One Redundancy Terminator Kit (AS-911T-KIT)
- HSBY Function Block Software

AS-911K-806	Kit with 6 foot W911 Cable
AS-911K-812	Kit with 12 foot W911 Cable
AS-911K-830	Kit with 30 foot W911 Cable

984 / S911 Single Cable Hot Standby System

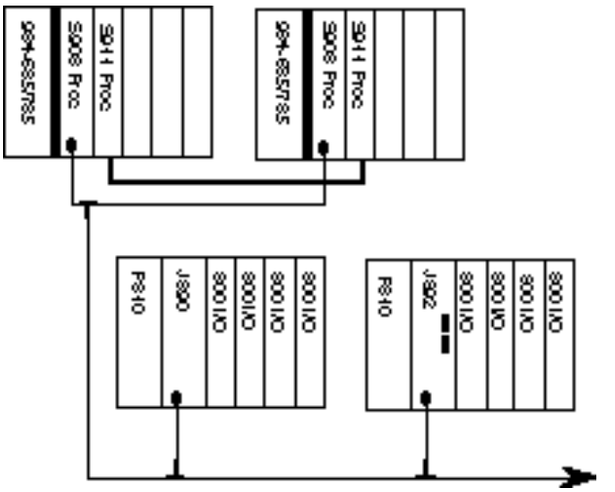

S911-800 Hot Standby Technical Specifications

Configuration Information

PLCs that use S911-800	984-685/785
Part #, HSBY Function Block for 984-685, 785	SW-AP98-RXA
Data Exchange Rate	5 megabits/sec
Worst Case Switchover Time	13 ... 48 milliseconds
Power Source	984-68x/78x power supply
Power Draw	
+5 V	1500 mA
+4.3 V	0 mA
5 V	0 mA

Environmental

Operating Temperature	0 ... 60°C
Relative Humidity	0 ... 95% non-condensing
Shock Resistance	10G (11 ms)

Physical

Space Requirements	One option slot in H8xx-209 subrack
Max. Distance between PLCs	30 ft (9 m)
Weight	4.5 lbs (2 kg)

984 / S911 Dual Cable Hot Standby System

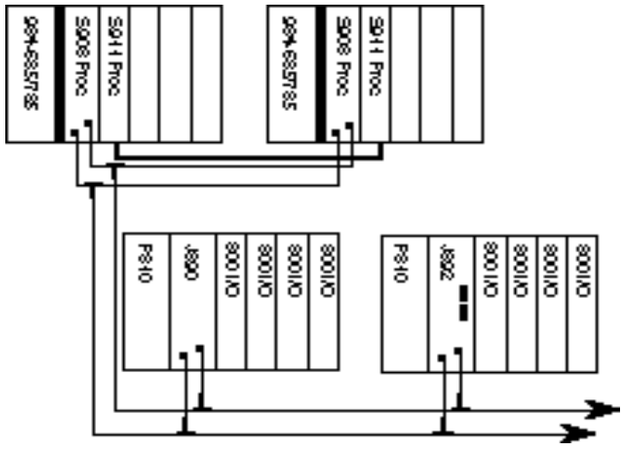

C996 Integrated Control Processor

The C996 Integrated Control Processor, or DOS CoPro, is a DOS-compatible computer which provides the power to solve problems that are difficult or inefficient to do in ladder logic, by extending the processing capabilities of the 984-685 and 984-785 slot-mount PLCs. This makes the DOS CoPro option perfect for complex tasks such as floating point arithmetic, serial communications, data concentration, miscellaneous network interfaces, operator interfaces, and more.

Using DOS, you may adapt many standard applications and increase the performance of the 984 system. The C996 contains 1024 bytes of RAM memory, two serial (RS232) ports, a floppy drive interface, and a keyboard interface. Two (AM-C996-802) or four (AM-C996-804) standard 1/2 size XT slots are available for option boards, such as video adapters, network interface cards and the like.

One instruction integrates computing power into the control system. The CoPro's simple interface to the ladder logic program is a software function block, CALL.

The M996 mass storage device provides extensive, non-volatile data storage for the C996 CoPro. The storage device is packaged in a shock resistant enclosure to minimize internal vibration. A 40 Mbyte hard disk drive, interface card, and 1.44 Mbyte floppy disk drive are included, as well as a cable to connect the mass storage device to the CoPro.

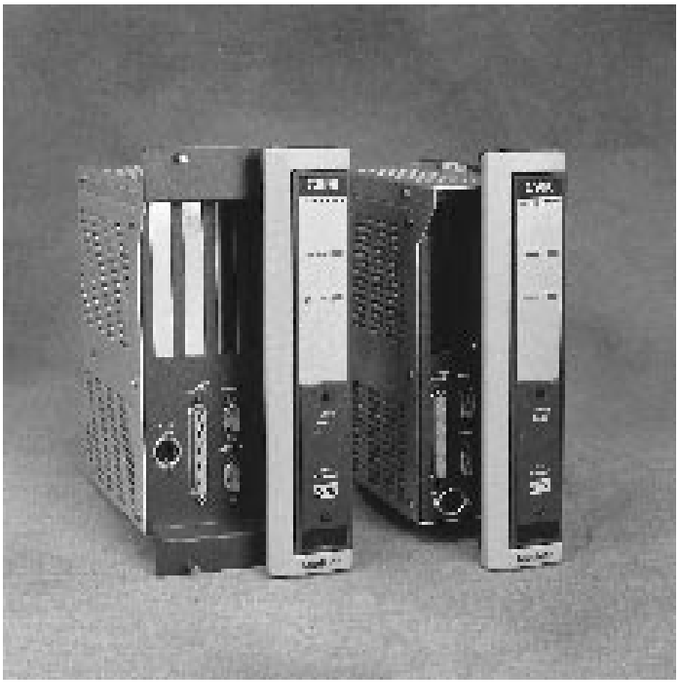

The AM-C996-80x DOS CoProcessor provides DOS compatible coprocessing and interface capability to 984, 685 and 785 controllers.

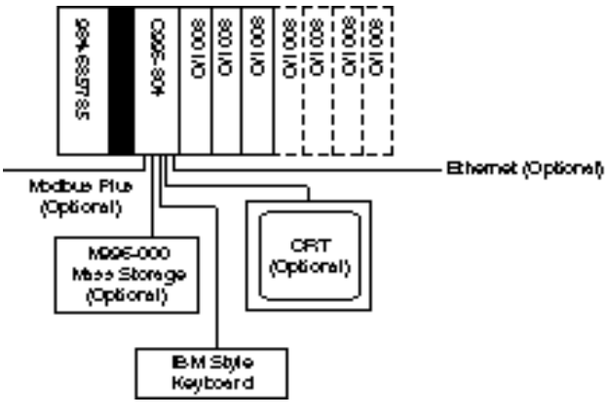

Call Function Block

Ladder Logic Interface

to C Language Tasks

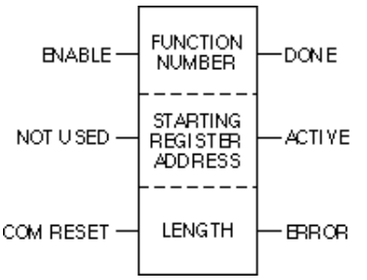

C996 Technical Specifications

Description

C996 CoPro	Option module for the 984-685, 785

Components

C996 CoPro	AM-C996-802 1.5 slots AM-C996-804 2 slots
M996	AS-M996-001 Mass Storage Includes: • 40 Megabyte hard disk • 3.5 floppy disk (1.4 megabyte capacity) • W996 comm cable • AC power cable
Cables (Modicon P/N)	AS-W950-006 (C996 to Modem, 6 ft.) AS-W951-012 (C996 to IBM XT, 12 ft) AS-W952-012 (C996 to IBM AT, 12 ft) AS-W488-006 (C996 to IEEE-488, 6 ft) AS-W996-006 (C996 to M996, 6 ft) PA-0407-000 (Floppy, 3 ft)

984 Family Compatibility

C996s Per 984 Controller	two maximum
C996-802	1.5 slots, 6.3 Watts
C996-804	2 slots, 6.3 Watts
S908	1 slot, 7.5 Watts
S911	1 slot, 5.8 Watts
S985	1 slot, 5.0 Watts
984-785, 685	1.5 slots Total Power, 40 Watts max.

Total option power for two C996-804s must not exceed 25 Watts.

Hardware

CPU	80286 at 8 MHz
Optional Math Coprocessor	80287 at 5.3 MHz
Memory	1 Megabyte of Dynamic RAM
C996 LED Indicators	Ready Status 1 (user definable) Battery Low
Battery	Operational Life: 1 year Shelf Life: 5 years Front panel accessible Battery Lithium AA Cell
Communications Ports	2 serial ports RS-232 Baud rate 150-9600 software selectable Default 9600/8 bit/no parity

Software

BIOS:	Award Software ver. 3.04 or higher
Operating System	MS-DOS or IBM-PC DOS ver. 3.3
Required Software	Modicon P/N SW-AP98-CXA Includes: • IBM/P190 CALL Function Block • C996 Utilities Software • C996 "C" Libraries • Immediate Call Block routines
Device Driver	C996 SYS 70k (included in config. sys.)
Programming Language	C Programming Language
Compiler	"User-supplied" Microsoft C ver. 5.1
Documentation	
C996 Installation Manual	GX-C996-002
C996 Software Manual	GX-C996-001

Expandability

IBM-XT Card Requirements	
Expansion Slots	
C996-802	2 XT slots
C996-804	4 XT slots
Max. Size (H x D)	4.2 in x 5.5 in
Power Consumption for XT Cards:	
Maximum Per Card	1.25 A (6.2W)
Maximum Cumulative Power	
C996-802	1.8 A (9W)
C996-804	3.6 A (18W)

Environmental

Operating Temperature	0 to 60°C
Storage Temperature	-40° to 80°C
Relative Humidity	0 to 95% (non-condensing)
Shock Resistance	10G (11ms)
Space Requirements:	
C996-802	1.5 system bus slots in H8xx-209 housing (fits with CPU)
C996-804	2 system bus slots in H8xx-209 housing
Weight	
C996-802	3.5 lbs (1.6 kg)
C996-804	4.5 lbs (2.0 kg)

984 Chassis-Mount PLCs

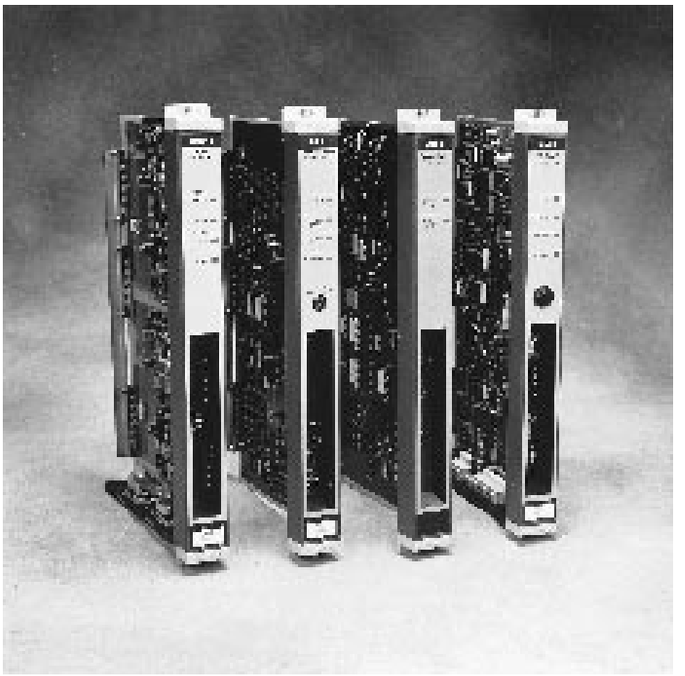

Chassis-mount PLCs are the perfect choice for mid-to-large sized applications which require fast logic solving. The three models of 984 chassis mount PLCs include the 984A, 984B, and 984X.

Maximum Performance for Time Critical Applications

If your application is time critical, choose chassis-mount PLCs. They have logic solve times of .75 milliseconds per k of user logic, one of the fastest logic solve times in the industry. A special Segment Scheduler lets you program time critical sections of user logic so their logic solve times are even faster.

Controller Housings

Modules that make up a 984 chassis-mount PLC can be housed in either a four or seven card chassis. 984 chassis-mount systems that use the four-slot chassis come with a P930 Power Supply. Systems that use the seven-slot chassis use the P933 Power Supply.

Option Modules

The chassis-mount PLCs can support up to three option modules. To use option modules with a 984A or 984B PLC, you must use the seven card chassis. Option modules include:

Communication Options
- S978 Dual Modbus Modem
- S985 Modbus Plus Interface

Optional Processors
- R911 Hot Standby Processor
- C986 Control Processor (CoPro)

The 984X chassis supports only two option modules. The 984X is only available in a four-card chassis.

The R911-000 Hot Standby Processor is useful in applications that require fault tolerance and high availability. It allows you to have a backup control system immediately available in case of failure.

The C986 Control Processor, or CoPro, extends the processing capabilities of the PLC by offloading complex logic from the PLC. This way you can increase system speed through multiprocessing and flexible multi-tasking capabilities.

The S985 Modbus Plus interface provides connectivity to a Modbus Plus peer-to-peer communication network for data transfer and remote programming capabilities. The S985 also supports Modbus Plus cable redundancy. The S978 Dual Modbus Modem provides two modems to connect the 984 in a twisted-pair Modbus network.

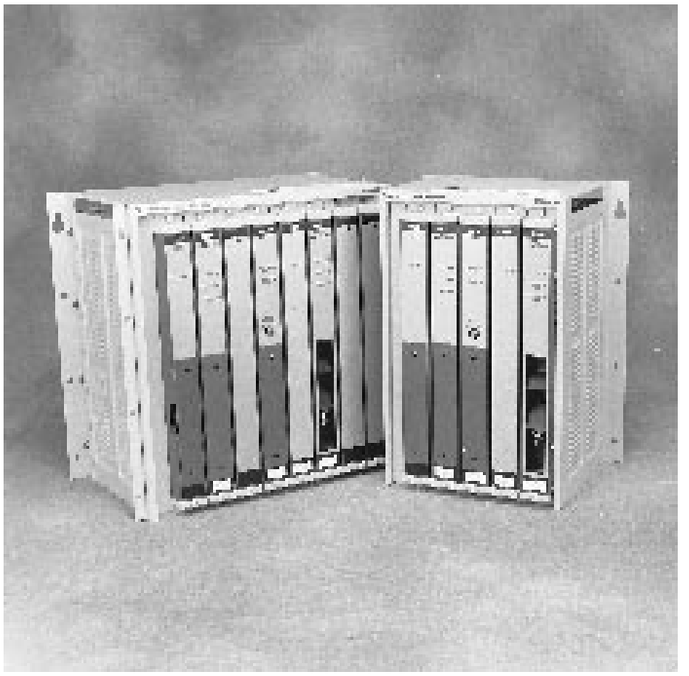

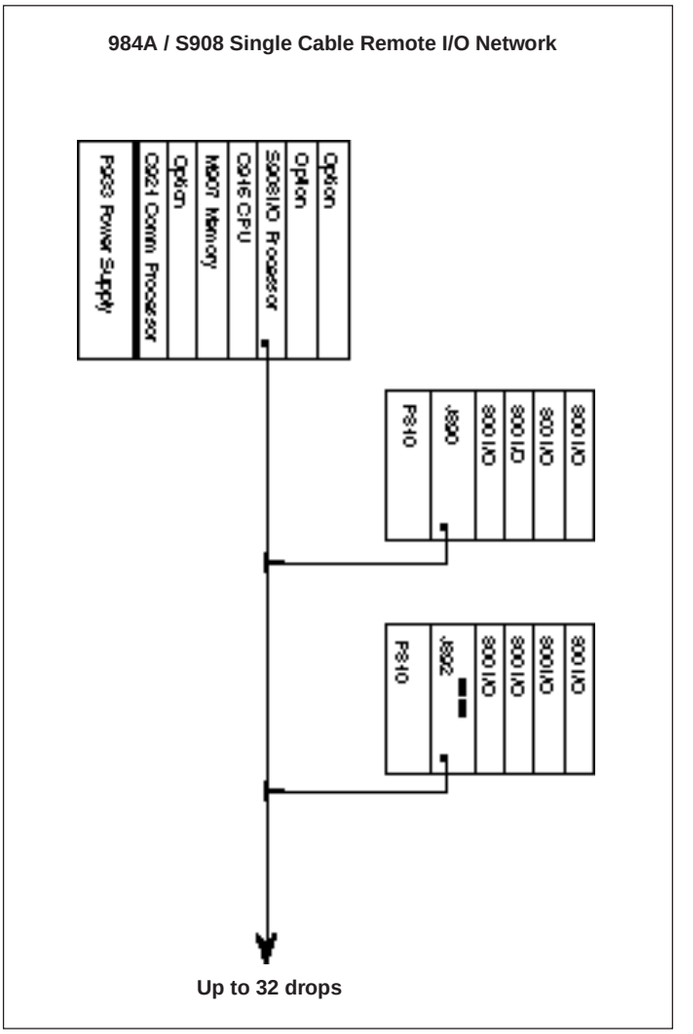

The 984A PLC is designed for applications that need a high performance PLC with medium memory requirements and remote input/output control.

The 984A's S908 Remote Input/Output Processor supports up to 32 drops of 800 Series remote I/O. The 984A does not support local I/O configurations.

You can choose to add option processing to your 984A system. You can configure a Hot Standby system by adding the R911-000 Hot Standby system. You can also increase your system speed and processing power by adding up to three C986 CoProcessors. Communication options are described in Section 7: Networking.

984A / S908 Dual Cable Remote I/O Network

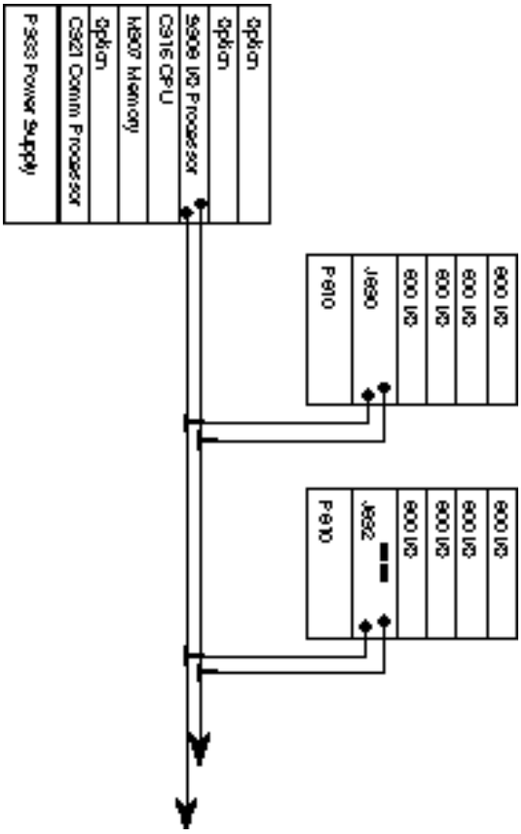

984A Technical Specifications

Architecture

Memory		
User logic	6k	32k
Registers	920	1920
Total	8k	34k
I/O Capacity		
Max. Discrete I/O	2048 any mix	
Max. Analog I/O	1920	
Total I/O Bits	32,768	
Local I/O Capacity	N/A	
Remote I/O Capacity		
Max. I/O Bits per Drop	1024 In/1024 Out	
Max. # Drops	32	
Total I/O Bits	32,768 any mix	
Max. # ASCII Ports	32	
Internal Coils	2048	
Logic Solve Time	.75 ms/k	
Communication Ports	3 Modbus, 1 Simple ASCII Output	

Electrical

Power Supply	
Input Voltage	115 Vac 230 Vac
I/O Power Capacity	N/A

Environmental

Temperature	0 ... 60°C
Humidity	0 ... 95% non-condensing
Shock Resistance	10 G (11 ms)

Dimensions (WxHxD)

4-slot Chassis	11.6 x 19.2 x 10.2 in (295 x 488 x 259 mm)
7-slot Chassis	17.3 x 19.2 x 10.2 in (440 x 448 x 259 mm)

Weight

4-slot Chassis	46 lbs (21 kg)
7-slot Chassis	55 lbs (25 kg)

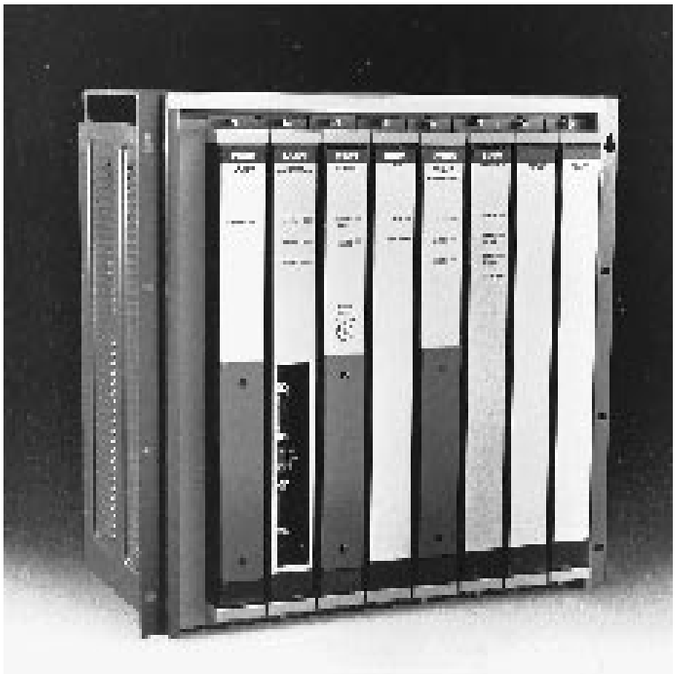

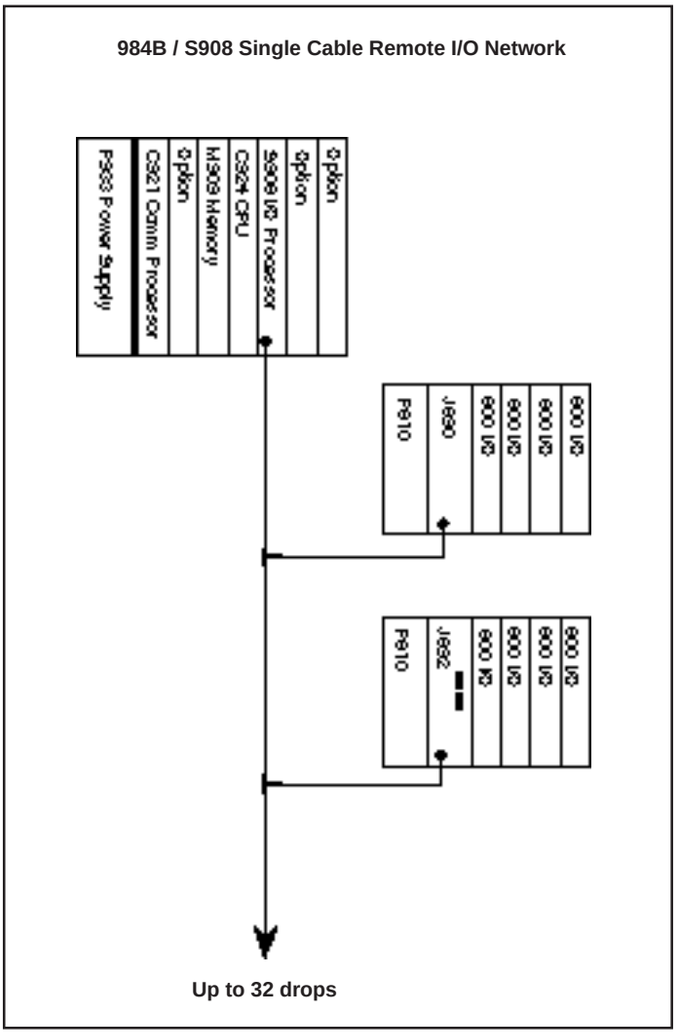

The 984B PLC is designed for applications that need a high performance PLC with large memory requirements. You can enhance the controller's user logic memory capacity with up to 96k of extended data memory.

The 984B's S908 Remote Input/Output Processor supports up to 32 drops of 800-Series remote I/O.

You can choose to add option processing to your 984B system. You can configure a Hot Standby system by adding the R911-000 Hot Standby system. You can also increase your system speed and processing power by adding up to three C986 CoProcessors. Communication options are described in Section 7: Networking.

984B / S908 Dual Cable Remote I/O Network

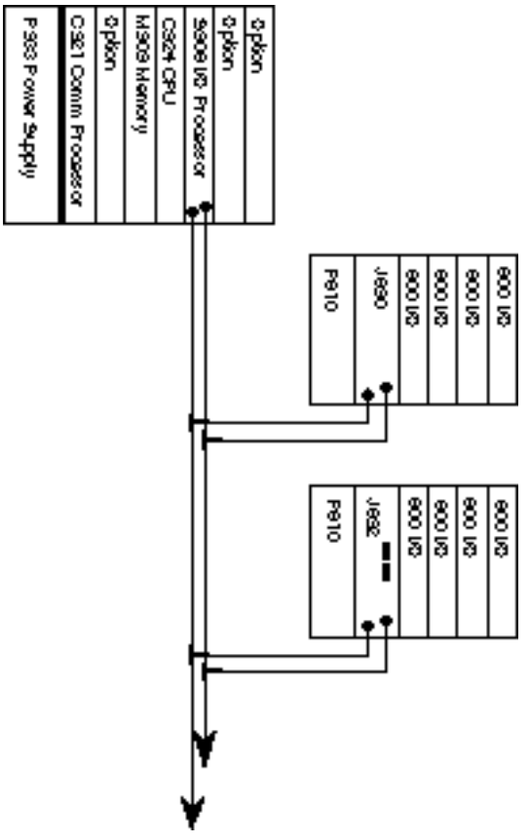

Up to 32 drops

984B Technical Specifications

Architecture		
Memory		
User Logic	32k	64k
Registers	9999	9999
Extended Memory Registers	up to 96k	up to 96k
Total	42 ... 138k	74 ... 138k
I/O Capacity		
Max. Discrete I/O	8192 In / 8192 Out	
Max. Analog I/O	2048 In / 2048 Out	
Total I/O Bits	32,768 In/32,768 Out	
Local I/O Capacity	N/A	
Remote I/O Capacity		
Max. I/O Bits per Drop	1024 In/1024 Out	
Max. # Drops	32	
Total I/O Bits	32,768 In /32,768 Out	
Max. # ASCII Ports	32	
Internal Coils	8192	
Logic Solve Speed	.75 ms/k	
Communication Ports	3 Modbus 1 Simple ASCII In/Out	
Electrical		
Power Supply		
Input Voltage	115 Vac 230 Vac	
I/O Power Capacity	N/A	
Environmental		
Temperature	0 ... 60°C	
Humidity	0 ... 95% non-condensing	
Shock Resistance	10 G (11 ms)	
Dimensions (WxHxD)		
4-slot Chassis	11.6 x 19.2 x 10.2 in (295 x 488 x 259 mm)	
7-slot Chassis	17.3 x 19.2 x 10.2 in (440 x 448 x 259 mm)	
Weight		
4-slot Chassis	46 lbs (21 kg)	
7-slot Chassis	55 lbs (25 kg)	

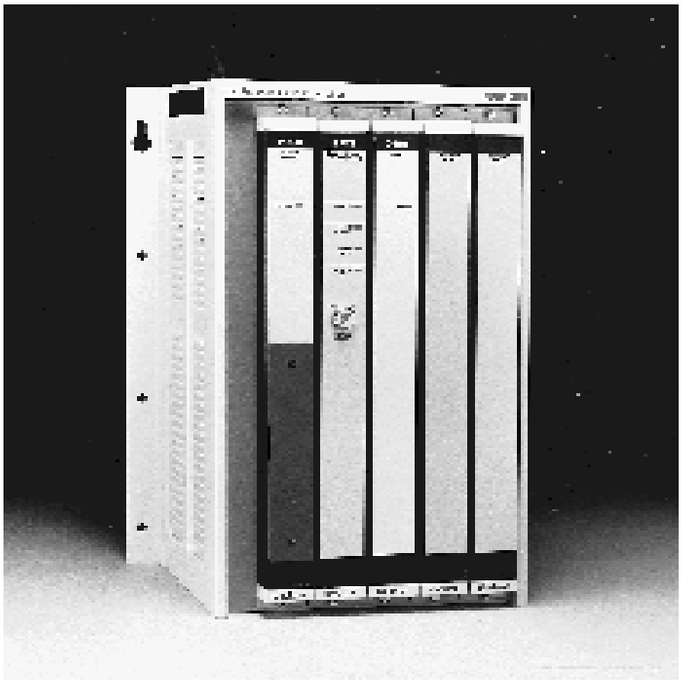

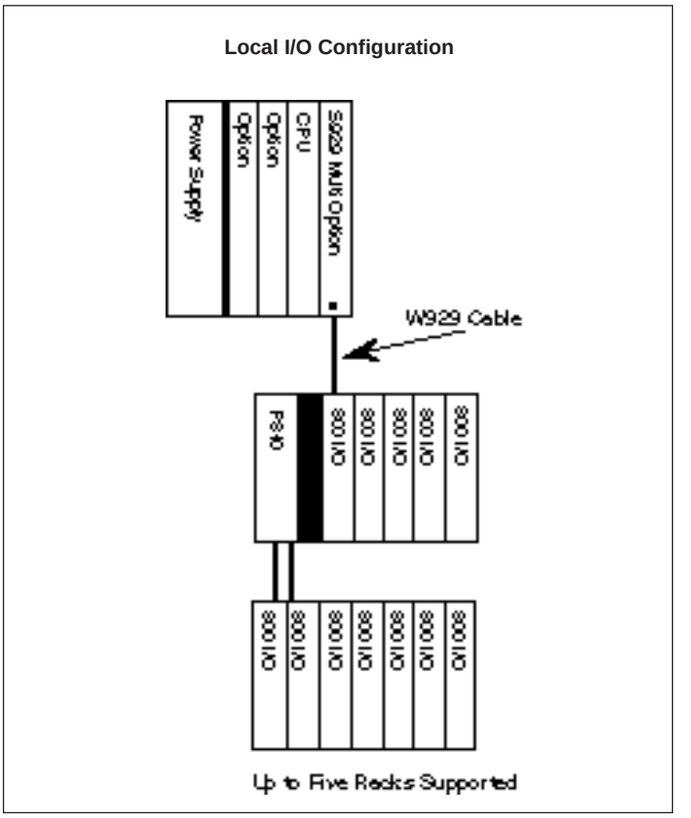

The 984X PLC is designed for applications requiring a high performance PLC with medium memory requirements.

The 984X supports one drop of local 800 Series I/O and up to 6 remote 800-Series I/O drops. The ability to communicate to remote I/O is facilitated by the S908 communications protocol, a functionality which is built into the mainframe. This feature supports a single cable network with up to six drops of remote I/O.

The 984X also supports as many as two option modules. You can configure a Hot Standby system by adding the R911-000 Hot Standby Processor or you can increase your system speed and processing power by adding as many as two C986 CoProcessors. Communications options are described in Section 7: Networking.

Remote I/O Configuration

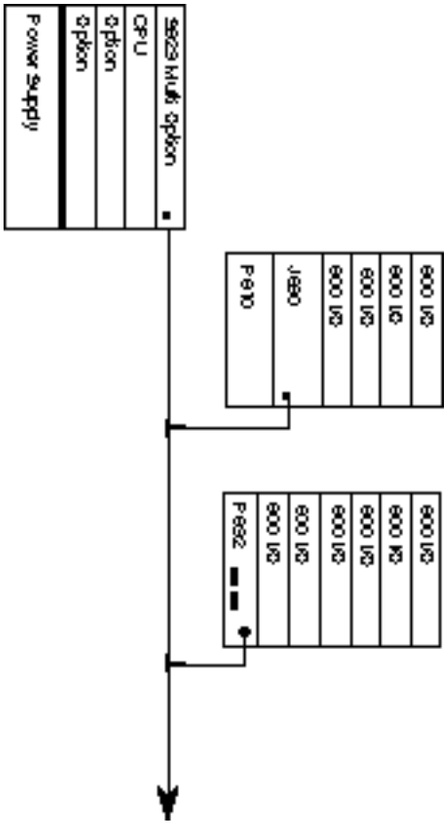

Up to 32 drops

984X Technical Specifications

Architecture	
Memory	
User Logic	8K
Registers	1920
Total	10K
I/O Capacity	
Max. Discrete I/O	2048 any mix
Max. Analog I/O	224 In/224 Out
Local I/O Capacity	
Total I/O Bits	512 In /512 Out
Total I/O Racks	5
Remote I/O Capacity	
Max. I/O Bits per Drop	512 In/512 Out
Max. # Drops	6
Total I/O Bits	3584 In/3584 Out
Max. # ASCII Ports	12
Internal Coils	2048
Logic Solve Speed	.75 ms/k
Communication Ports	2 Modbus
Electrical	
Power Supply	
Input Voltage	115 Vac 230 Vac
I/O Power Capacity	N/A
Environmental	
Temperature	0 ... 60°C
Humidity	0 ... 95% (non-condensing)
Shock Resistance	10 G (11 ms)
Dimensions (WxHxD)	
4-slot Chassis	11.6 x 19.2 x 10.2 in (295 x 488 x 259 mm)
Weight	
4-slot Chassis	46 lbs (21 kg)

ModConnect AT2-984 or AT4-984 PLC for AT bus/EISA Personal Computers and EISA Workstations

The AT-984 is offered in two models, AT2-984 and AT4-984, and both are full functionality 984 PLCs that mount into a single slot of an IBM-AT personal computer, EISA personal computer, EISA RISC workstation or compatible. It acts as a powerful logic coprocessor for the personal computer or workstation by scanning I/O and solving 984 logic programs while the computer handles data processing and man-machine interface requirements.

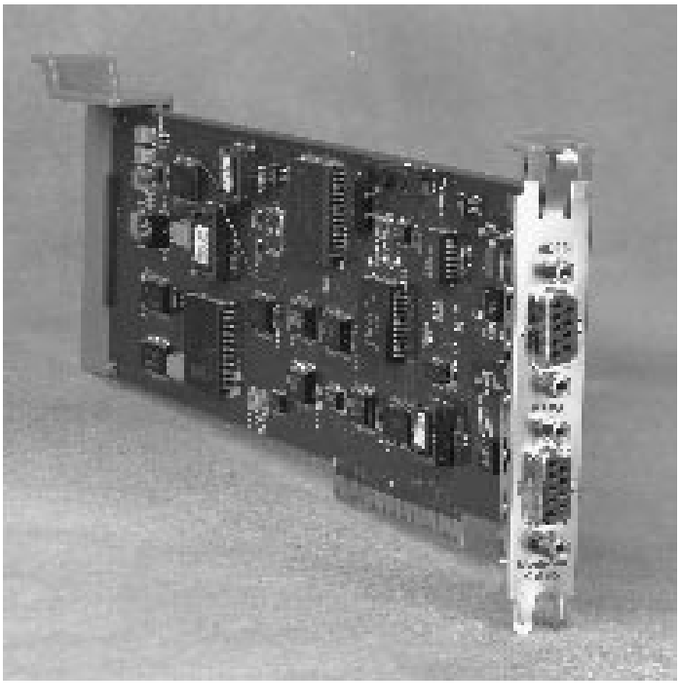

AT-984 Software Support

The AT-984 PLC's NetBIOS interface for DOS and OS/2 is the same interface used on the SA85 AT bus, the SM85 Micro Channel Modbus Plus, and MC-984 Micro Channel controller boards. It supports many existing applications including:

- Modicon Modsoft Programming and Documentation Software
- Integrated software architecture to speed application development (AT4-984 only)
- Peer Cop Process Control Function Library (PCFL)
- Modicon FactoryLink Man-Machine Interface Software
- Modicon P230 Emulation Software
- Modicon MBPSTAT program for monitoring Modbus Plus networks
- Other third party programming Panel Software, MMI software, and operating system device drivers for Modbus Plus

Software Tools for Developing Custom Applications

Included with every AT-984 PLC are sample programs and a C library. They allow the development of custom applications to suit your unique requirements.

AT2-984 Technical Specifications

Part Number AM-0984-AT2*	**AT-984 processor board and support software**
Architecture	
Memory	
User Logic[1]	16k
Registers[2]	1920
Total	18k
I/O Capacity	
Max. Discrete I/O	2048 any mix
Max. Analog I/O	224 in/224 out
Local I/O Capacity	N/A
Remote I/O Protocol	S908 protocol
Remote I/O Capacity	
Max I/O Bits per Drop[4]	512 in/512 out
Max. Drops	7
Max Cable Distance	4,000 ft.
Total I/O Bits	3548 in/3548 out
Max. # ASCII Ports	14
Max Internal Coils[3]	2048
Performance	1.5 ms/K words
Communication Ports	1 Redundant Modbus Plus Port, 1 R10
Time of Day Clock	±8.0 sec/day accuracy @ 60°C
Physical	
Hardware	AT-984 processor board
Software	NetBIOS device driver for DOS and OS/2, NETLIB.C C library, TESTXX.C sample programs, MBPSTAT diagnostic
Software Media	5 1/4 inch, 360k diskettes, 3 1/2 inch, 720k diskette
Documentation	GM-HBDS-001 IBM Host-based Devices Users Guide
Optional Supporting Documentation	GM-0984-SYS Systems Manual, GM-MBPL-001 Modbus Plus Network Planning and Installation Guide
Host Software Information	
Operating System	MS-DOS Ver. 3.1 or higher, OS/2 Ver. 1.3 or higher
C Library	IBM C V1.1
AT-984 Boards per Computer	2 any type; SA85, AT-984
Selectable Options	Address, memory, interrupts (DIP switches & jumpers)
Battery	2430 coin type lithium
LED Indicators	None
Power	750 mA typical
Size (HxD)	Standard full-size AT card 4.5 x 13.3 in (114 x 338 mm)
Weight	
Net	1.0 lbs (.45 kg)
Shipping	2.0 lbs (.9 kg)
Environmental	
Temperature	
Operating	0 ... 60°C
Storage	-40 to 80°C
Humidity	0 to 95% (non-condensing)
Shock	10 G's for 11 msec

[1] Deduct approximately 1k words for system overhead

[2] Includes analog/register I/O and internal register space

[3] Includes discrete I/O and internal coils

[4] Each discrete I/O points requires 1 bit, each analog/register point requires 16 bits

* Redundant Modbus Plus Cable

AT4-984 Technical Specifications

Part Number AM-0984-AT4*AT-984 processor board and support software

Architecture

Memory	
User Logic[1]	32k
Registers[2]	32,224
Total	64k
Logic Solve Time	1.5 ms/K
Input/Output I/O Series	800/500/200[5]
I/O Capacity	
Max Discrete I/O[3]	16,384 in/16,384 out
Max Analog I/O[3]	1024 in/1024 out
Total Drops	16

Remote IOP

S908/800:	Remote I/O Interface	J890/J892 P890/P892
	I/O Bits[4] Drop	1024/1024
S908/200:	Remote I/O Interface	J290/J291
	I/O Bits[4] Drop	256/256
	Cable Distance	4000 feet
	ASCII Ports:	2/Drop 32/System
	I/O Modules per Drop	32

[1] Deduct approximately 1k words for system overhead

[2] Includes Analog/Register I/O and Internal Register Space

[3] Each Analog/Register I/O Point requires 16 bits

[4] Each Discrete I/O Point requires 1 bit. Each Analog/Register I/O Point requires 16 bits

[5] 500-Series I/O Modules via P45x/J540 Interface (Discrete only)

Communications – Modbus Plus

Speed	1 Megabit per second
Mode	Peer-to-Peer
Number of Nodes on One Network	64 with one repeater
Media	Twisted Pair
Distance	1500 ft./section without repeaters 6000 ft./(Max.) between any two nodes with repeaters
Connectors	Two 9-Pin D for cable redundancy

Instructions

Language	• Ladder Logic/Function Block
Instructions	• Relays – NO, NC, Transitional • Timers – 1.0, 0.1, 0.01 sec. • Counters – Up, Down
Arithmetic	• 4-digit Add, Sub, Mult, Div • 4-digit BCD values
Data Transfer	• Register-to-Table • Table-to-Table • Block Move • First-In, First-Out • Search, Status
Matrix	• Logical AND, OR, Exclusive OR • Compare and Complement
Bit Operations	• Bit Modify, Bit Sense, and Bit Rotate
ASCII	• Read and Write Functions up to 32 ASCII Ports
Enhanced Instructions	• Table to Block • Double Precision Math: Add, Sub, Mult, Div • Floating Point Math: Add, Sub, Mult, Div, Compare, Sq Root • Trigonometric Sin, Cos, Tan, Deg to Rad • PID2 • Skip • Constant Scan • Subroutine • MSTR for Modbus Plus • CKSUM • 16 bit signed/unsigned math Add / Div. Sub / Int. to Float Mult / Float to Integer Test = ,>,<
	• PCFL
Optional Software Loadables	• FNxx Custom Loadable • DRUM and ICMP Drum Sequencer

Segment Scheduler
Segment scheduler – I/O Scan optimization allows selection of I/O update sequence for time-critical applications

Diagnostics
Power-Up diagnostics: CPU, RAM/ROM, Communications
Continuous per Scan: CPU, I/O Module Health, State Table Memory, Detection of error causes an orderly shut-down of the controller and logging of error type

Time of Day Clock
1 year battery backed. Accuracy ±8.0 sec./Day 0-60˚
Logic Word Size – 24 Bits

Memory – Battery backed for 1 year

Environmental Characteristics

Ambient Temperature	0-60˚C –40 to 80˚C
Humidity	0-95% non-condensing
Shock	10G's for 11 msec
Vibration	.625 @ 50-500 Hz
RFI/EMI Emission	Complies with applicable FCC requirements
RFI/EMI Susceptibility	ML-STD-461B CS02-Conducted RS03-Radiated
UL Listing	Approval Pending
CSA Listing	Approval Pending
Part Number	AM-0984-AT4
Description	AT-984 Programmable Controller for AT and EISA-bus
Included	AT-984 board Media: 5-1/4" 360K 3-1/2" 720K diskettes NETBIOS Drive NETLIB.CC Library TESTXX.C Sample Programs MBPSTAT Diagnostic GM-HBDS-001 Manual, IBM Host Based Devices Users Guide
Operating System	MS-DOS ver. 3.1 or higher
C Library	Microsoft C 5.1, Large Model DESCview 2.24
Selectable Options	Station Address, Memory and Interrupts are all set by dip switches and jumpers
Battery	2430 coin type lithium
Indicators	LEDs provided for installation: RIO, Modbus Plus, and Run
Power	750mA Typ, 1.1A Max.
Size	Standard AT Card 4.5" high, 13.3" long
Weight	Net 1.0 lbs Shipping 2.0 lbs

Optional Supporting Documentation

GM-0984-SYS Modicon 984 Programmable Controller Systems Manual.

GM-MBPL-001 Modicon Modbus Plus Network Planning and Installation Guide

* Redundant Modbus Plus Cable

R911-000 Hot Standby System for Chassis-Mount PLCs

If your application requires fault tolerance and high availability, consider the hot standby option, available on 984A, 984B, and 984X PLCs.

NOTE: The 984X should be configured with remote I/O only when used with the R911 HSP.

A hot standby system provides backup control in case of a failure. Two identically-configured 984 PLCs communicate with each other via R911 Hot Standby Modules located in each PLC. Each PLC also has a loadable hot standby instruction block (HSBY), programmed into its user logic, which communicates status information between the two PLCs.

One of the PLCs in the hot standby system operates as the primary PLC. It reads input data from the remote input/output drops, executes ladder logic, and sends output commands back to the drops. The primary PLC continuously updates the standby PLC with system status information at the end of each logic solve.

In normal conditions, the standby PLC does not perform control functions; it merely processes status information. However, if the primary PLC fails, the standby PLC assumes primary control functions within 48 milliseconds of the failure.

To configure an S911 Hot Standby System, you need, in addition to PLCs and input/output drops :

- R911 Hot Standby Processors in each PLC
- S908 or S929 Remote Input/Output Processors in each PLC
- W911 cable (6 ft. and 12 ft. lengths)
- Redundancy terminator kit
- Two 75 ohm self-terminating connectors
- One MA-0186-000 coaxial line splitter

Ordering Information

For ordering Hot Standby systems, single part numbers are available combining appropriate components:

- HSBY Function Block Software
- Two R911 Processor Boards
- One W911 Cable
- One Redundancy Terminator Kit
- One MA-0186-000 Coaxial Splitter

AS-911K-106	Kit with 6 foot W911 Cable
AS-911K-112	Kit with 12 foot W911 Cable

984 / R911 Hot Standby System
(Dual Cable is Optional)

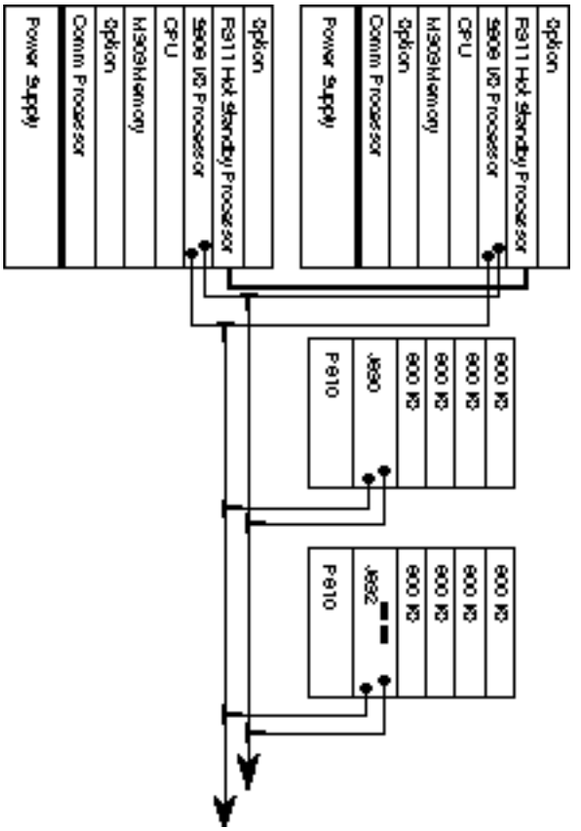

R911 Hot Standby Technical Specifications

Configuration Information

PLCs that use R911	984A, 984B, 984X
Part #, HSBY Function Block	SW-AP9X-RXA
Data Exchange Rate	10 megabits/sec
Worst Case Switchover Time	13 ... 48 milliseconds
Power Source	Mainframe PLC power supply

Environmental

Operating Temperature	0 ... 60°C
Relative Humidity	0 ... 95% (non-condensing)
Shock Resistance	10G (11 ms)

Physical

Space Requirements	One option slot in chassis
Max. Distance Between PLCs	30 ft (9 m)
Weight	4.5 lbs (2 kg)

C986 Integrated Control Processor

The C986 Integrated Control Processor, or CoPro, provides the power to solve problems that are difficult or inefficient to do in ladder logic, by extending the processing capabilities of 984 chassis-mount PLCs (984A, 984B, and 984X). This makes the CoPro option perfect for complex tasks such as floating point arithmetic, serial communications, or data concentration.

Using the VRTX Operating System, the CoPro can increase system performance through its multiprocessing and flexible multi-tasking capabilities. The CoPro can handle up to 10 independent tasks simultaneously. It contains a processor and math coprocessor chip as well as 768k RAM to offload the main PLC from data intensive operations.

You can expand the processing capabilities of your system three-fold by installing up to three CoPro's in a 984 mainframe (two in a 984X).

One instruction integrates computing power into the control system. The CoPro's simple interface to the ladder logic program is a software function block, CALL, which invokes the C986 program's operation.

An optional mass storage device provides extensive, non-volatile data storage for the 984 enhanced with the CoPro. The storage device is packaged in a shock resistant enclosure to minimize internal vibration. This M986 Mass Storage Device includes a 40 Mbyte hard disk drive, 360 kbyte floppy disk drive, and a cable from C986 Integrated Control Processor to the M986 Mass Storage Device.

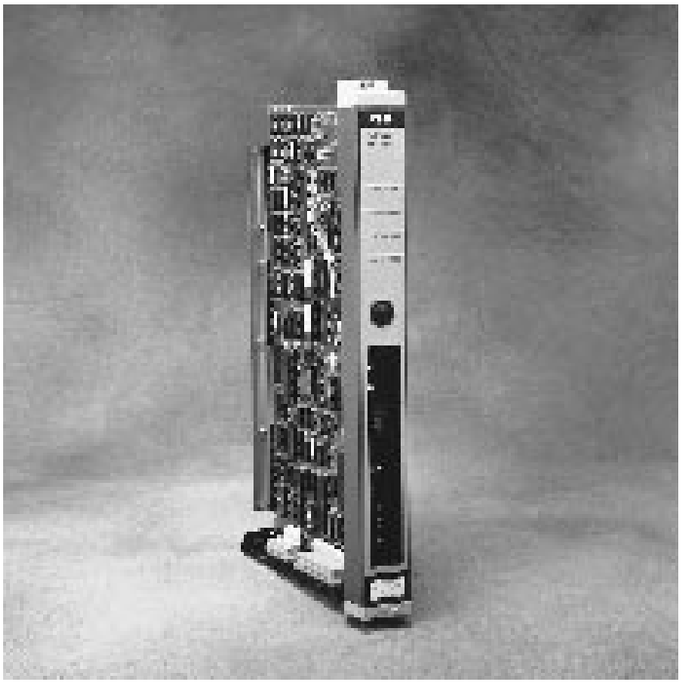

Call Function Block

Ladder Logic Interface to C Language Tasks

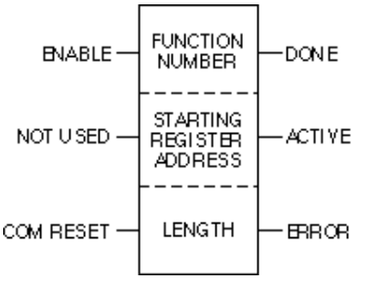

C986 Technical Specifications

Configuration Information	
PLCs with C986 Option	984A, 984B, 984X
Power Source	Mainframe power supply
Architecture	
Processor Chip	80186
Math Coprocessor Chip	8087
Operating System	VRTX multi-tasking op. sys.
Language	"C" programming language
Memory	
Program & Data	256 kbyte battery-backed RAM
Data	512 kbyte dynamic RAM
Environmental	
Operating Temperature	0 ... 60°C
Storage Temperature	-40 to 80°C
Relative Humidity	0 ... 95% (non-condensing)
Shock Resistance	10G (11 ms)
Physical	
Space Requirements	1 option slot in chassis
Weight	4.6 lbs (2.1 kg)

984 System with C986 CoPro

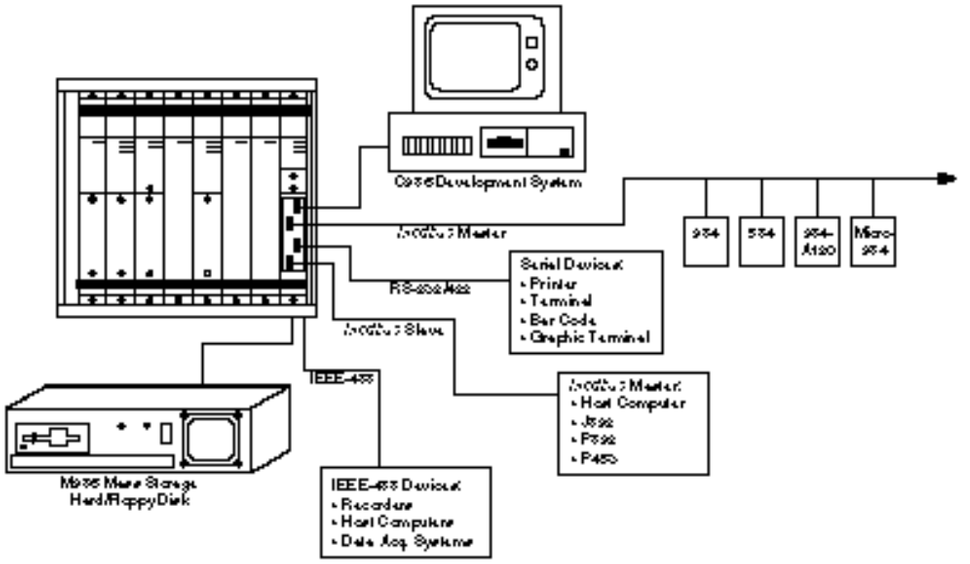

800-Series Input/Output Modules

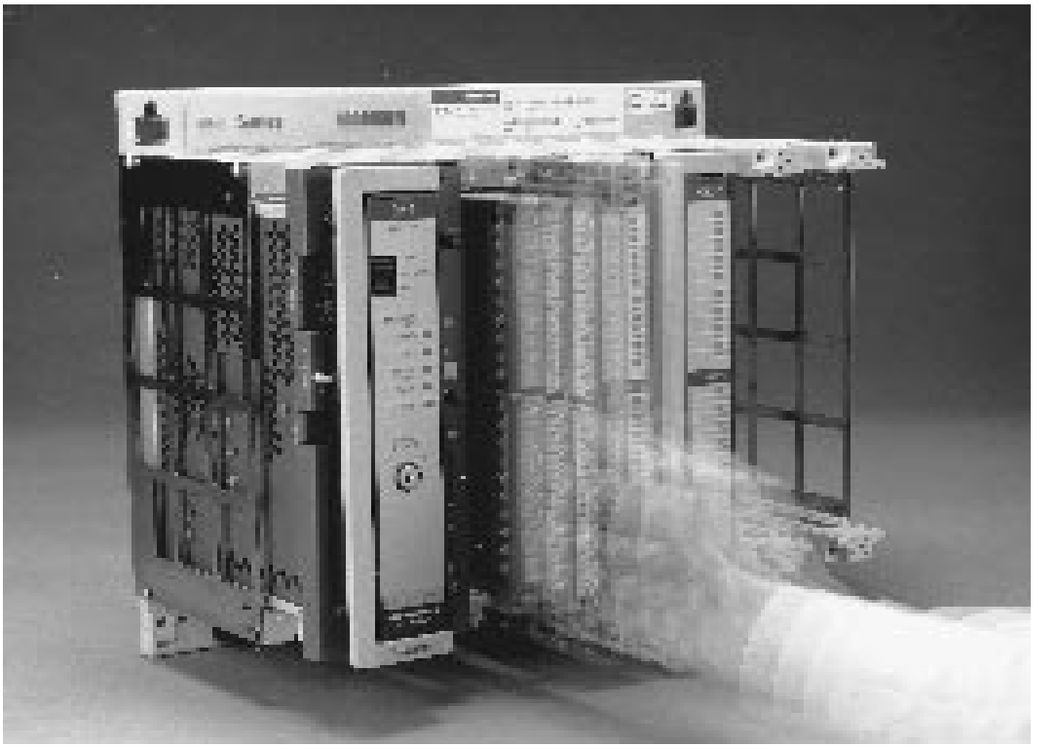

Overview

The Modicon 800-Series input/output modules offer one of the industry's widest ranges of I/O modules. Their dependability has been proven in thousands of applications worldwide. With over 50 modules to choose from, you can select the most cost-effective module for field device requirements.

The Modicon I/O Family offers discrete, analog, special purpose and intelligent modules to meet the most demanding I/O and process control needs:

- *Discrete In* – which convert signals coming from field input devices such as pushbuttons, limit and proximity switches, or photo sensors into signals that can be used by the PLC.
- *Discrete Out* – which convert signals generated by the PLC into output signals used to control field devices such as motor starters, relays, lamps, or solenoids.
- *Analog In* – which convert analog signals coming from field input devices such as pressure, level, temperature, or weight sensors into numerical data that can be used by the PLC.
- *Analog Out* – which convert numerical data generated by the PLC into analog output signals to be used by field devices — such as heaters, valves, pumps, instrumentation, or drives.
- *Special Purpose* – which handle unique signal requirements. Examples include high speed counter, CAM Emulator, RTD, and Thermocouple Modules.
- *Intelligent* – designed for unique field applications that require bi-directional (in/out) capabilities and on-board processing power. Examples include an ASCII/BASIC Module and a high speed logic solver.

Benefits

True Industrial Grade Design for High Reliability

800-Series modules meet domestic and international safety standards.

Isolation voltage between outputs and the I/O bus and between output groups is:

1500 Vac at 47-63 Hz for 60 seconds without breakdown

2500 Vdc for 60 seconds without breakdown

All modules have surge protection that meets IEEE-472-1974 and ANSI C37-90A-1974 standards— which helps ensure their operation when subjected to the surge spikes normally encountered in industrial environments. Solid mechanical packaging ensures that modules withstand the rigors of industrial environments.

Easy to Configure, Wire, and Maintain

All 800-Series I/O modules are software addressable via the 984's Traffic Cop software. Designed for efficient system configuration, it allows any module to be configured in any slot, regardless of the module type. Furthermore, it recognizes incorrect module placement and prevents PLC misoperation.

A mechanical keying scheme ensures that modules cannot be inserted in the wrong slot.

800-Series I/O modules can be changed without disturbing field wiring because wires are connected to rigid mounted terminal blocks on the housing. Modules slide in and out easily so changing modules is safe and quick.

Built-in diagnostic indicators let maintenance personnel quickly determine module status. For example, every 800-Series I/O module has an ACTIVE light which is a green LED located at the center of the front panel. When an I/O module's ACTIVE LED is on constantly, it indicates that the module has been properly configured and that communications between it and the 984 PLC are healthy.

When communications between the module and the PLC are invalid for any reason, the ACTIVE LED on the module goes OFF. If communication fails, the module automatically shuts down, and the PLC sets all inputs to 0. When communication is restored, the ACTIVE LED goes back ON. This ACTIVE LED is mapped into a register within the PLC for remote diagnosis and annunciation.

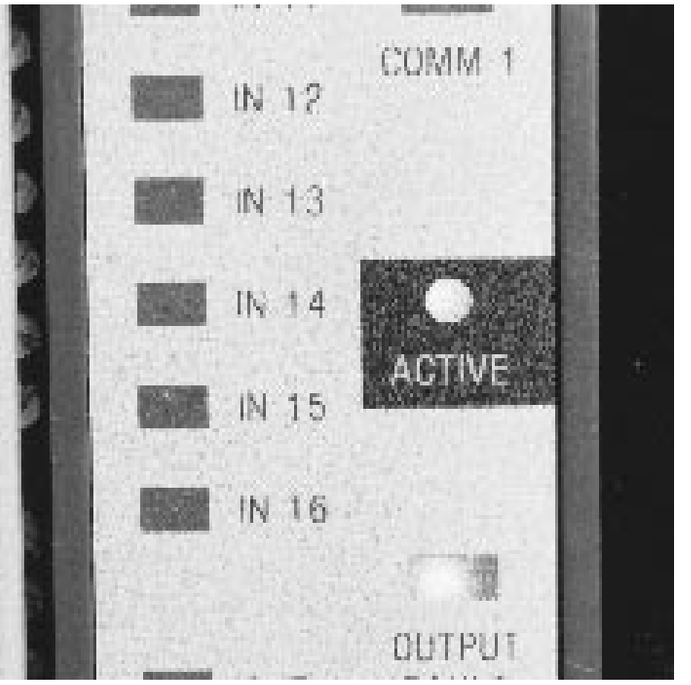

General 800-Series I/O Specifications

Environmental Specifications	
Ambient Temperature	0-60°C
	32-140°F
Humidity	0-95% non-condensing
Shock	10 G's for 11 msec
Vibration	.625 @ 50-500 Hz
RFI/EMI Emission	Complies with applicable FCC requirements
RFI/EMI Susceptibilility	ML-STD-461B
	CS02-Conducted
	RS03-Radiated
UL Listing	E54088
CSA Listing	LR32678

Discrete In

Voltage	Number of Points	Number per Common	Required Addressing I/O Bits	Module #	Required Connector
115 Vac	32	8	32/0	AS-B807-132	AS-8535-000
115 Vac	16	8	16/0	AS-B805-016	AS-8534-000
115 Vac	16	1	16/0	AS-B817-116	AS-8535-000
115 Vac	8	1	8/0	AS-B803-008	AS-8534-000
230 Vac	16	8	16/0	AS-B809-016	AS-8534-000
230 Vac	16	1	16/0	AS-B817-216	AS-8535-000
24 Vdc Supr. Wire	32	8	64/0	AS-B863-132	AS-8535-000
24 Vdc (TH)	32	32	32/0	AS-B827-032	AS-8535-000
24 Vdc (TH)	16	8	16/0	AS-B825-016	AS-8534-000
24 Vdc (TL)	16	8	16/0	AS-B833-016	AS-8534-000
24 Vdc (LATCH)	16	8	16/16	AS-B881-001	AS-8534-000
24 Vdc*	32	16	16/0	AS-B863-032	AS-8535-000
10-60 Vdc (TH)	8	2	8/0	AS-B821-108	AS-8534-000
24 Vac/DC	16	8	16/0	AS-B837-016	AS-8534-000
48 Vac/DC	16	8	16/0	AS-B849-016	AS-8534-000
115 Vac	16	8	16/0	AS-B853-016	AS-8534-000
5 V TTL	16	8	16/0	AS-B829-116	AS-8534-000
TTL Register	16	—	16/0	AS-B865-001	AS-8535-000
12 Vdc Intr. Safe	16	1	16/0	AS-B855-016	AS-8535-000

*Monitored Input.

Broad Range of Module Types

With over 50 modules to choose from, the Modicon I/O line offers one of the industry's broadest range of I/O modules.

Discrete Out

Voltage	Number of Points	Number per Common	Required Addressing I/O Bits	Module #	Required Connector
115 Vac	32	16	0/32	AS-B806-032	AS-8535-000
115 Vac	16	8	0/16	AS-B804-116	AS-8534-000
115 Vac	8	1	0/8	AS-B810-008	AS-8534-000
115 Vac	8	2	0/8	AS-B802-008	AS-8534-000
115 Vac Protected	8	1	16/16	AS-B881-108	AS-8535-000
48 Vac	16	8	0/16	AS-B804-148	AS-8534-000
24 Vac	32	16	0/32	AS-B806-124	AS-8535-000
230 Vac	16	8	0/16	AS-B808-016	AS-8534-000
24 Vdc Supr. Wire	16	8	16/16	AS-B882-116	AS-8534-000
24 Vdc (TH)	32	8	0/32	AS-B838-032	AS-8535-000
24 Vdc (TH)	32	32	0/32	AS-B826-032	AS-8535-000
24 Vdc (TH)	16	8	0/16	AS-B824-016	AS-8534-000
24 Vdc (TL)	16	8	0/16	AS-B832-016	AS-8534-000
24 Vdc Diagnostic	32	8	32/32	AS-B882-032	AS-8535-000
10-60 Vdc (TH)	8	2	0/8	AS-B820-008	AS-8534-000
12-250 Vdc	16	1	0/16	AS-B836-016	AS-8535-000
Relay (NO/NC)	8	1	0/8	AS-B814-108	AS-8534-000
Reed Relay (NO/NC)	8	1	0/8	AS-B840-108	AS-8534-000
5 V TTL	16	16	0/16	AS-B828-016	AS-8534-000
TTL Register	—	—	0/128	AS-B864-001	AS-8535-000
125 Vdc	8	—	16/16	AS-B881-508	AS-8535-000

Analog In

Application/Range	Number of Points	Required Addressing I/O Bits	Module #	Required Connector
Fast A/D: 4-20 mA; ±5 V; ±10 V; 0-10 V; 0-5 V; 1-5 V	8	128/0	AS-B875-102	Included
A/D; 4-20 mA;1-5 V	8	128/0	AS-B875-002	Included
A/D; 4-20 mA;1-5 V	4	64/0	AS-B873-001	Included
A/D; -10 to 10 V	8	128/0	AS-B875-012	Included
A/D; -10 to 10 V	4	64/0	AS-B873-011	Included
Thermocouple, Type B,E,J,K,R, S,T,N, or linear V	10	48/48	AS-B883-200	Included
RTD, American or European 100 Ohm Platinum	8	48/48	AS-B883-201	Included
Analog Multiplexer; 16 Voltage In, 1 Output	16	0/16	AS-B846-001	AS-8535-000
Analog Multiplexer, 16 Current In, 1 Output	16	0/16	AS-B846-002	AS-8535-000
A/D; 4-20mA; 1-5 V; -10 to10 V 0-20mA; -5 to 5 V	8/16	128/0 256/0	AS-B875-111	AS-8535-000
User Configurable Analog	8	128/0	AS-B875-200	AS-8535-000

Analog Out

Application/Range	Number of Points	Required Addressing I/O Bits	Module #	Required Connector
D/A: 4-20 mA	4	0/64	AS-B872-100	AS-8535-000
D/A: ±10 V; ±5 V; 0-10 V; 0-5 V	4	0/64	AS-B872-200	AS-8535-000

Intelligent/Special Purpose

Description	Required Addressing I/O Bits	Module #	Required Connector
High speed counter, 2 up-counters, 0-30 kHz	32/32	AS-B882-239	Included
High speed counter, 2 up/down, 0-50 kHz, Internal clock	48/48	AS-B883-001	Included
CAM emulator, absolute encoder input, 8 discrete out	48/48	AS-B883-101	Included
CAM emulator with velocity compensation	48/48	AS-B883-111	Included
PID: 2 loops, cascadable, standalone, 11 total I/O	64/64	AS-B884-002	Included
ASCII/BASIC, 64K RAM, 2 RS232/422 ports	96/96	AS-B885-002	Included
Discrete High Speed Logic Solver	64/64 or 128/128	AS-B984-100	Included
Motion Control Module	96/96	AS-B885-100	Included
Motion Control Module (with Encoder Feedback)	96/96	AS-B885-110	Included

Individual Module Descriptions
Technical Specifications, Mechanical Keying, and Wiring Diagrams

Specification	AS-B802-008
Description	115 Vac output
Number of Points	8
Operating Voltage	80 ... 130 Vac / 47 ... 63 Hz
Number of Groups	4
Outputs per Group	2
ON Current	
Max. per Point	2 A continuous
	50 A (max) one cycle
Max. per Module	12 A
Leakage Current	3 mA (max) @ 115 Vac
Max. Response Time	
OFF to ON	8.3 ms @ 60 Hz
ON to OFF	8.3 ms @ 60 Hz
Power Required	
+5 V	76 mA
+4.3 V	240 mA
-5 V	0 mA
Dimensions	
Space Required	1 slot
Weight	2.55 lbs (1.16 kg)
Terminal Connector	AS-8534-000
Fusing	One per group

AS-B802-008 Terminal Numbering and Wire Connections

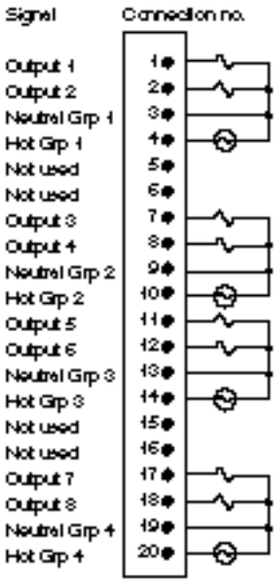

AS-B802-008 Mechanical Keying for Housings

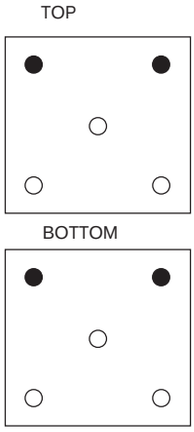

(When facing housing, place pins in holes shown by black circles.)

Specification	AS-B803-008
Description	115 Vac isolated input
Number of Points	8
Operating Voltage	80 ... 130 Vac / 47 ... 63 Hz
Number of Groups	8
Inputs per Group	1
Max. Input Voltage	
Continuous	130 Vac
Surge	220 Vac for one cycle
ON Conditions	80 ... 130 Vac (Z<1kΩ)
OFF Conditions	0 ... 35 Vac (Z=0 Ω)
	0 ... 130 Vac (Z≥40 kΩ)
Wetting Current	7 mA (typical) @ 115 Vac
Max. Response Time	
OFF to ON	6 ms (4 ms typical)
ON to OFF	18 ms (12 ms typical)
Power Required	
+5 V	27 mA
+4.3 V	1 mA
-5 V	2 mA
Dimensions	
Space Required	1 slot
Weight	2.11 lbs (0.96 kg)
Terminal Connector	AS-8534-000

AS-B803-008 Terminal Numbering and Wire Connections

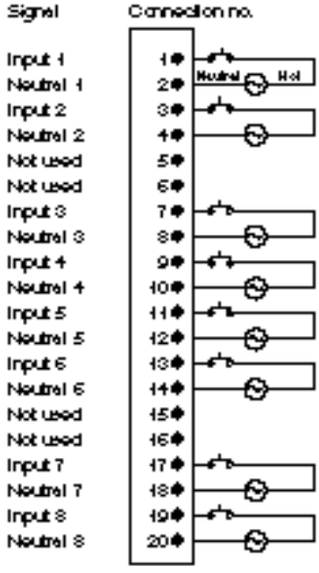

AS-B803-008 Mechanical Keying for Housings

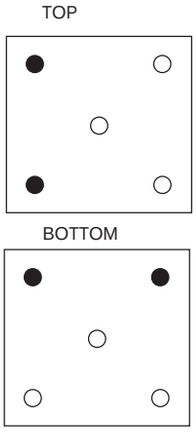

(When facing housing, place pins in holes shown by black circles.)

Specification	AS-B804-116
Description	115 Vac output
Number of Points	16
Operating Voltage	80 ... 130 Vac / 47 ... 63 Hz
Number of Groups	2
Outputs per Group	8
ON Current	
Max. per Point	2 A continuous 50 A one cycle
Max. per Group	6 A
Max. per Module	12.0 A
Leakage Current	3 mA (max) @ 115 Vac
Max. Response Time	
OFF to ON	8.3 ms @ 60 Hz
ON to OFF	8.3 ms @ 60 Hz
Power Required	
+5 V	76 mA
+4.3 V	480 mA
-5 V	0 mA
Dimensions	
Space Required	1 slot
Weight	2.75 lbs (1.25 kg)
Terminal Connector	AS-8534-000
Fusing	One per group

AS-B804-116 Terminal Numbering and Wire Connections

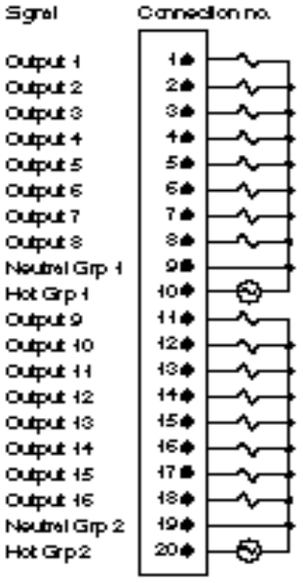

AS-B804-116 Mechanical Keying for Housings

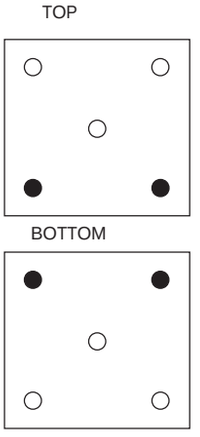

(When facing housing, place pins in holes shown by black

Specification	AS-B804-148
Description	48 Vac output
Number of Points	16
Operating Voltage	40 ... 56 Vac / 47 ... 63 Hz
Number of Groups	2
Outputs per Group	8
ON Current	
Max. per Point	2 A continuous 50 A one cycle
Max. per Group	6 A
Max. per Module	12.0 A
Leakage Current	3 mA (max)
Max. Response Time	
OFF to ON	8.3 ms @ 60 Hz
ON to OFF	8.3 ms @ 60 Hz
Power Required	
+5 V	76 mA
+4.3 V	480 mA
-5 V	0 mA
Dimensions	
Space Required	1 slot
Weight	2.75 lbs (1.25 kg)
Terminal Connector	AS-8534-000
Fusing	One per group

AS-B804-148 Terminal Numbering and Wire Connections

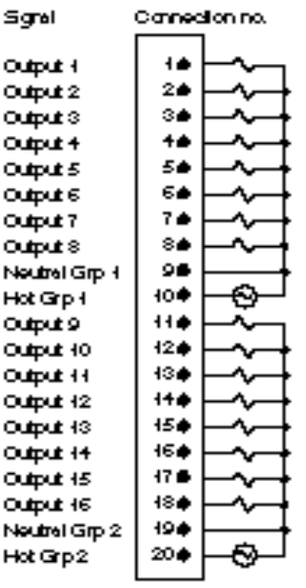

AS-B804-148 Mechanical Keying for Housings

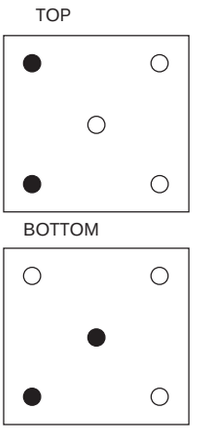

(When facing housing, place pins in holes shown by black circles.)

Specification	AS-B805-016
Description	115 Vac input
Number of Points	16
Operating Voltage	80 ... 130 Vac / 47 ... 63 Hz
Number of Groups	2
Inputs per Group	8
Max. Input Voltage	
Continuous	130 Vac
Surge	220 Vac for one cycle
ON Conditions	80 ... 130 Vac (Z<1kΩ)
OFF Conditions	0 ... 35 Vac (Z=0 Ω)
	0 ... 130 Vac (Z≥40 kΩ)
Wetting Current	6 mA (typical) @ 115 Vac
Max. Response Time	
OFF to ON	6 ms (4 ms typical)
ON to OFF	18 ms (11 ms typical)
Power Required	
+5 V	40 mA
+4.3 V	1 mA
-5 V	14 mA
Dimensions	
Space Required	1 slot
Weight	2.2 lbs (1.01 kg)
Terminal Connector	AS-8534-000

AS-B805-016 Terminal Numbering and Wire Connections

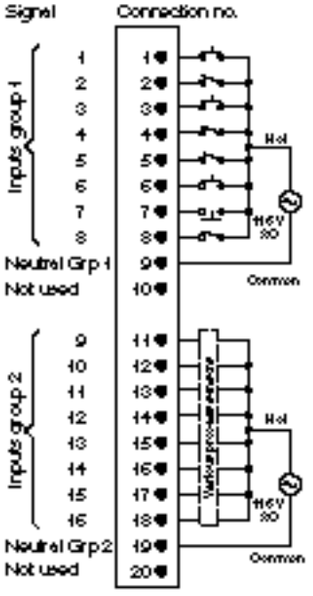

AS-B805-016 Mechanical Keying for Housings

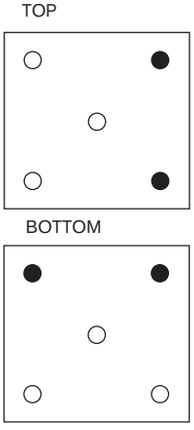

(When facing housing, place pins in holes shown by black circles.)

Specification	AS-B806-032
Description	115 Vac output
Number of Points	32
Operating Voltage	80 ... 130 Vac / 47 ... 63 Hz
Number of Groups	2
Outputs per Group	16
ON Current	
Max. per Point	1 A continuous
	15 A one cycle
Max. per Group	8 A
Max. per Module	16 A
Leakage Current	2 mA (max) @ 115 Vac
Max. Response Time	
OFF to ON	8.3 ms @ 60 Hz
ON to OFF	8.3 ms @ 60 Hz
Power Required	
+5 V	210 mA
+4.3 V	1 mA
-5 V	0 mA
Dimensions	
Space Required	1 slot
Weight	2.49 lbs (1.13 kg)
Terminal Connector	AS-8535-000
Fusing	None

AS-B806-032 Terminal Numbering and Wire Connections

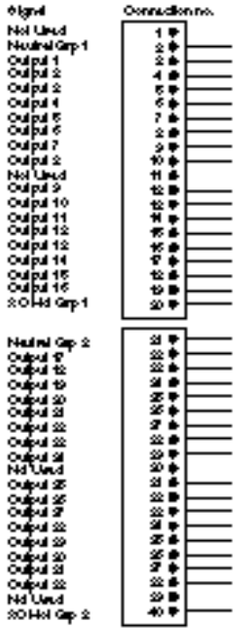

AS-B806-032 Mechanical Keying for Housings

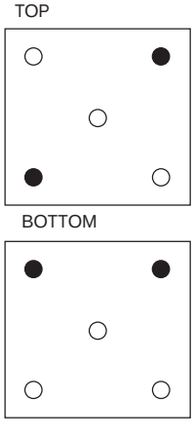

(When facing housing, place pins in holes shown by black circles.)

Specification	AS-B806-124
Description	24 Vac output
Number of Points	32
Operating Voltage	20 ... 28 Vac / 47 ... 63 Hz
Number of Groups	2
Outputs per Group	16
ON Current	
Max. per Point	1 A continuous 15 A one cycle
Max. per Group	8 A
Max. per Module	16 A
Leakage Current	2 mA (max.)
Max. Response Time	
OFF to ON	8.3 ms @ 60 Hz
ON to OFF	8.3 ms @ 60 Hz
Power Required	
+5 V	210 mA
+4.3 V	1 mA
-5 V	0 mA
Dimensions	
Space Required	1 slot
Weight	2.49 lbs (1.13 kg)
Terminal Connector	AS-8535-000
Fusing	None

AS-B806-124 Terminal Numbering and Wire Connections

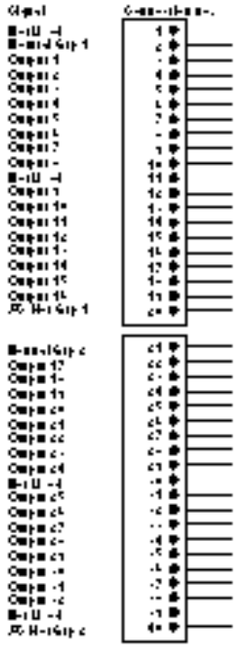

AS-B806-124 Mechanical Keying for Housings

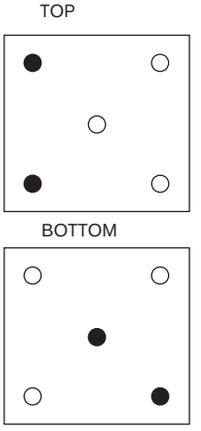

(When facing housing, place pins in holes shown by black circles.)

Specification	AS-B807-132	
	115 Vac	**125 Vdc**
Description	115 Vac hi-density input	125 Vdc input
Number of Points	32	32
Operating Voltage	80 ... 130 Vac/ 47 ... 63 Hz	115 ...140 Vdc cont.
Number of Groups	4	4
Inputs per Group	8	8
Max. Input Voltage		
Continuous	130 Vac	
Surge	200 Vac for 1 cycle	
ON Conditions	80 ... 130 Vac (Z<1kΩ)	115 ...140 Vdc
OFF Conditions	0 ... 35 Vac (Z=0 Ω) 0 ... 130 Vac (Z≥40 kΩ)	0 ... 20 Vdc
Wetting Current	6 mA (typical) @ 115 Vac	
Max. Response Time		
OFF to ON	6 ms	1.2 ms
ON to OFF	12 ms	55ms
Power Required		
+5 V	80 mA	80 mA
+4.3 V	2 mA	2 mA
-5 V	0 mA	0 mA
Dimensions		
Space Required	1 slot	1 slot
Weight	2 lbs (0.91 kg)	2 lbs (0.91 kg)
Terminal Connection	AS-8535-000	AS-8535-000

AS-B807-132 Terminal Numbering and Wire Connections

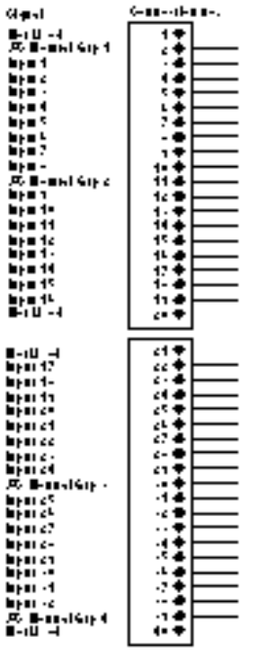

AS-B807-132 Mechanical Keying for Housings

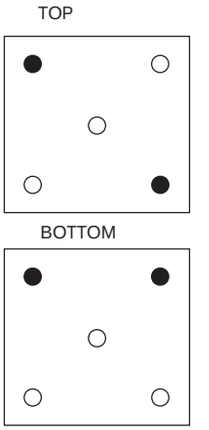

(Optional)

(When facing housing, place pins in holes shown by black circles.)

Specification	AS-B808-016
Description	230 Vac output
Number of Points	16
Operating Voltage	160 ... 260 Vac / 47 ... 63 Hz
Number of Groups	2
Outputs per Group	8
ON Current	
Max. per Point	2 A continuous
	50 A one cycle
Max. per Group	6 A
Max. per Module	12 A
Leakage Current	8 mA (max) @ 230 Vac
Max. Response Time	
OFF to ON	8.3 ms
ON to OFF	8.3 ms
Power Required	
+5 V	76 mA
+4.3 V	480 mA
-5 V	0 mA
Dimensions	
Space Required	1 slot
Weight	2.75 lbs (1.25 kg)
Terminal Connector	AS-8534-000
Fusing	One per group

AS-B808-016 Terminal Numbering and Wire Connections

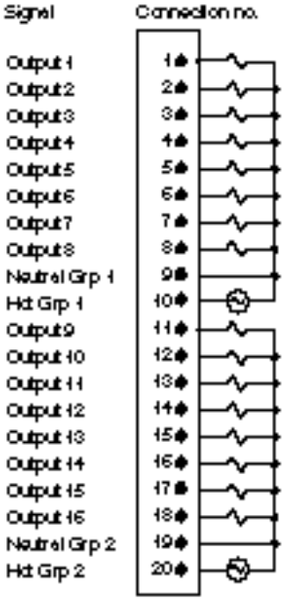

AS-B808-016 Mechanical Keying for Housings

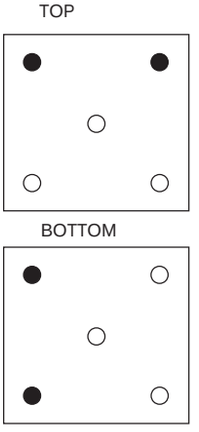

(When facing housing, place pins in holes shown by black circles.)

Specification	AS-B809-016
Description	230 Vac input
Number of Points	16
Operating Voltage	160 ... 260 Vac / 47 ... 63 Hz
Number of Groups	2
Inputs per Group	8
Max. Input Voltage	
Continuous	260 Vac
300 Vac for 10 sec.	
Surge	400 Vac for 1 cycle
ON Conditions	112 ... 148 Vac (RS=1 Kmax)
OFF Conditions	0 ... 90 Vac (Z=0 Ω)
Wetting Current	8.5 mA (typical) @ 230 Vac
Max. Response Time	
OFF to ON	7 ms (5 ms typical)
ON to OFF	18 ms (12 ms typical)
Power Required	
+5 V	42 mA
+4.3 V	1 mA
-5 V	15 mA
Dimensions	
Space Required	1 slot
Weight	2.38 lbs (1.08 kg)
Terminal Connector	AS-8534-000

AS-B809-016 Terminal Numbering and Wire Connections

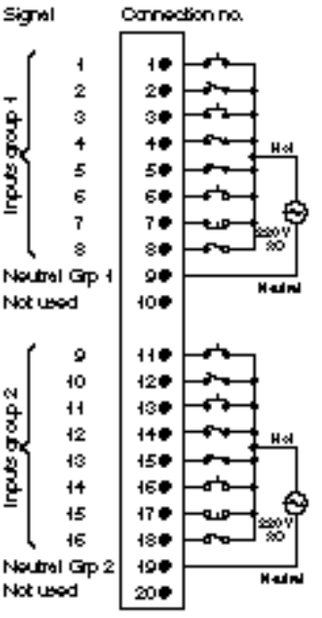

AS-B809-016 Mechanical Keying for Housings

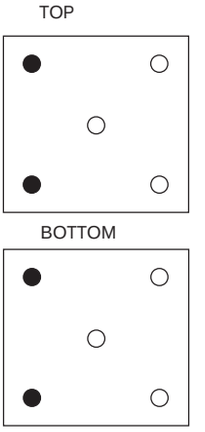

(When facing housing, place pins in holes shown by black circles.)

Specification	AS-B820-008
Description	10 ... 60 Vdc (True High) output
Number of Points	8
Operating Voltage	10 ... 60 Vdc
Number of Groups	4
Outputs per Group	2
ON Current	
Max. per Point	2 A
Max. per Group	6 A
Max. per Module	12 A
Leakage Current	5 mA (max.) @ 60 Vdc
Max. Response Time	
OFF to ON	1 ms (.1 ms typical)
ON to OFF	1 ms (.1 ms typical)
Power Required	
+5 V	90 mA
+4.3 V	80 mA
5 V	0 mA
External Power Supply	10 ... 60 Vdc, 200 mA @ 60 Vdc (Excluding field load current)
Dimensions	
Space Required	1 slot
Weight	2.55 lbs (1.16 kg)
Terminal Connector	AS-8534-000
Fusing	One per group

AS-B820-008 Terminal Numbering and Wire Connections

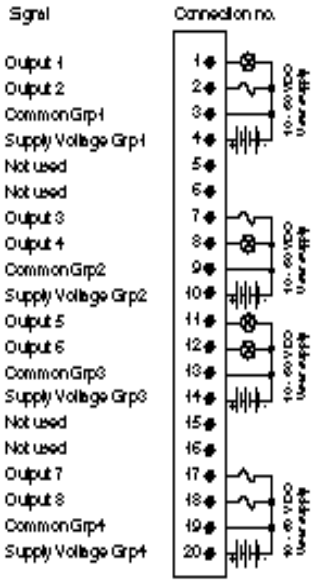

AS-B820-008 Mechanical Keying for Housings

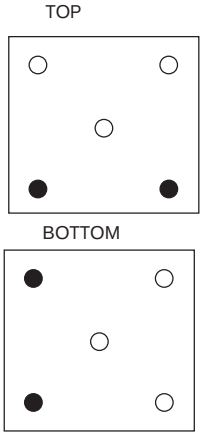

(When facing housing, place pins in holes shown by black circles.)

Specification	AS-B821-108
Description	10 ... 60 Vdc input
Type of Operation	True High
Number of Points	8
Operating Voltage	10 ... 60 Vdc
Number of Groups	4
Inputs per Group	2
Max. Input Voltage	
Continuous	10 ... 60 Vdc
Surge	80 Vdc for 10 msec
Wetting Current	2 mA (max.) @ 10 Vdc 5 mA (max.) @ 24 Vdc 10 mA (max.) @ 48 Vdc 12 mA (max.) @ 60 Vdc
Max. Response Time	
OFF to ON	11 ms
ON to OFF	11 ms
Power Required	
+5 V	27 mA
+4.3 V	1 mA
5 V	10 mA
External Power Supply	10 ... 60 Vdc, 200 mA @ 60 Vdc
Dimensions	
Space Required	1 slot
Weight	2.11 lbs (0.96 kg)
Terminal Connector	AS-8534-000

AS-B821-108 Terminal Numbering and Wire Connections

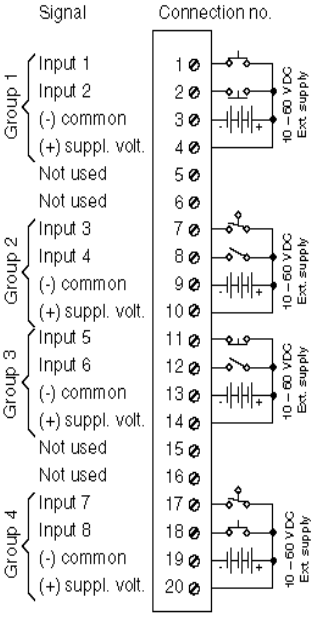

AS-B821-108 Mechanical Keying for Housings

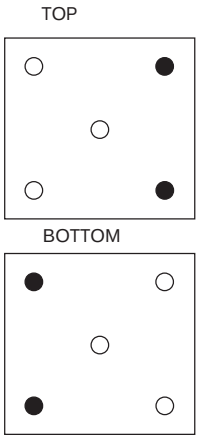

(When facing housing, place pins in holes shown by black circles.)

Specification	AS-B824-016
Description	24 Vdc (True High) output
Number of Points	16
Operating Voltage	20 ... 28 Vdc
Number of Groups	2
Outputs per Group	8
ON Current	
Max. per Point	2 A continuous
	5 A for 10 ms
Max. per Group	6 A
Max. per Module	12 A
Leakage Current	1 mA (max.) @ 24 Vdc
Max. Response Time	
OFF to ON	1 ms
ON to OFF	1 ms
Power Required	
+5 V	32 mA
+4.3 V	260 mA
5 V	0 mA
External Power Supply	24±4 Vdc, 175 mA (Excluding field load current)
Dimensions	
Space Required	1 slot
Weight	2.75 lbs (1.25 kg)
Terminal Connector	AS-8534-000
Fusing	One per group

AS-B824-016 Terminal Numbering and Wire Connections

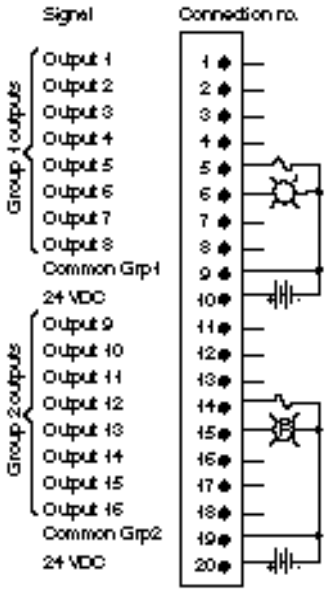

AS-B824-016 Mechanical Keying for Housings

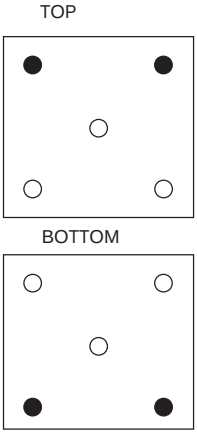

(When facing housing, place pins in holes shown by black circles.)

Specification	AS-B825-016
Description	24 Vdc input
Type of Operation	True High
Number of Points	16
Operating Voltage	20 ... 28 Vdc
Number of Groups	1
Inputs per Group	16
Max. Input Voltage	
Continuous	30 Vdc
Surge	500 Vdc for 3 ms
ON Conditions	< 1000 Ω
OFF Conditions	> 25,000 Ω
Wetting Current	6 mA (typical) @ 24 Vdc
Max Response Time	
OFF to ON	11 ms (2.5 ms typical)
ON to OFF	11 ms (2.5 ms typical)
Power Required	
+5 V	27 mA
+4.3 V	2 mA
5 V	15 mA
External Power Supply	24±4 Vdc, 200 mA
Dimensions	
Space Required	1 slot
Weight	2.75 lbs (1.25 kg)
Terminal Connector	AS-8534-000

AS-B825-016 Terminal Numbering and Wire Connections

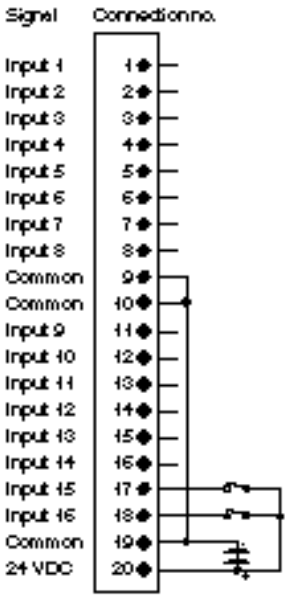

AS-B825-016 Mechanical Keying for Housings

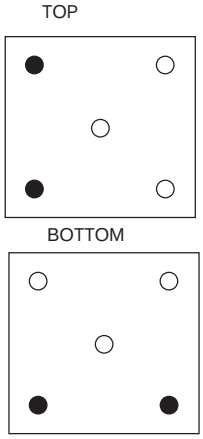

(When facing housing, place pins in holes shown by black circles.)

Specification	AS-B826-032
Description	24 Vdc True High output
Number of Points	32
Operating Voltage	20 ... 28 Vdc
Number of Groups	1
Outputs per Group	32
ON Current	
Max. per Point	0.25 A 2.5 A for .5 ms
Max. per Group	8 A
Max. per Module	8 A
Leakage Current	0.1 mA (typical) @ 24 Vdc
Max. Response Time	
OFF to ON	1 ms
ON to OFF	1 ms
Power Required	
+5 V	90 mA
+4.3 V	1 mA
5 V	0 mA
External Power Supply	24 Vdc, 600 mA (Excluding field load current)
Dimensions	
Space Required	1 slot
Weight	2.55 lbs (1.16 kg)
Terminal Connector	AS-8535-000
Fuse	One per group

AS-B826-032 Terminal Numbering and Wire Connections

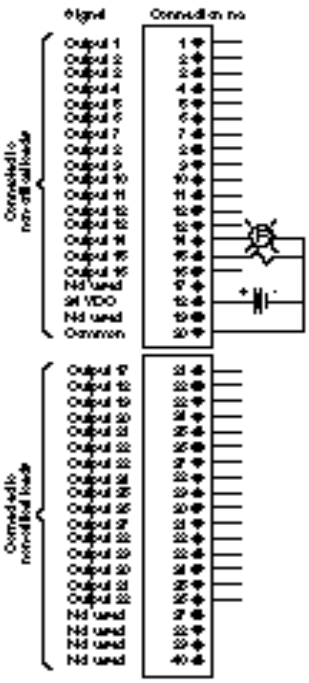

AS-B826-032 Mechanical Keying for Housings

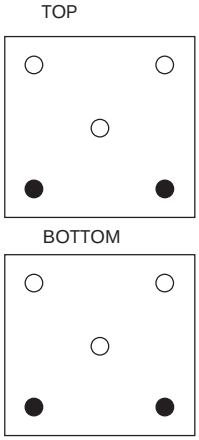

(When facing housing, place pins in holes shown by black circles.)

Specification	AS-B827-032
Description	24 Vdc hi-density input
Type of Operation	True High
Number of Points	32
Operating Voltage	20 ... 28 Vdc
Number of Groups	1
Inputs per Group	32
Max. Input Voltage	
Continuous	30 Vdc
Surge	40 Vdc for 10ms
ON Conditions	8 ... 11 kΩ
OFF Conditions	6 ... 8 kΩ
Wetting Current	6 mA (typical) @ 24 Vdc
Max Response Time	
OFF to ON	1 ms
ON to OFF	1 ms
Power Required	
+5 V	30 mA
+4.3 V	1 mA
-5 V	0 mA
External Power Supply	24±6 Vdc, 70 mA
Dimensions	
Space Required	1 slot
Weight	2.31 lbs (1.05 kg)
Terminal Connector	AS-8535-000

AS-B827-032 Terminal Numbering and Wire Connections

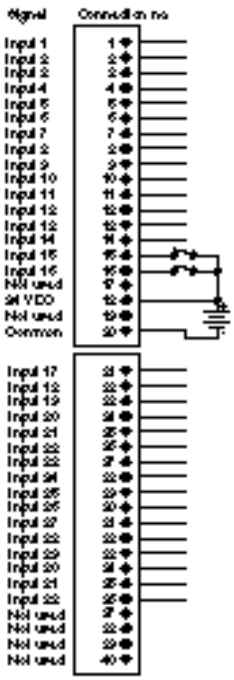

AS-B827-032 Mechanical Keying for Housings

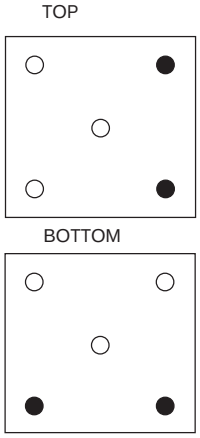

(When facing housing, place pins in holes shown by black circles.)

Specification	AS-B828-016
Description	5 V TTL output
Number of Points	16
Operating Voltage	5 V TTL
Number of Groups	1
Outputs per Group	16
OFF Current	
Max. per Point	75 mA max. (sinking) 100 mA for 10 ms
Max. Response Time	
OFF to ON	1 ms
ON to OFF	1 ms
Power Required	
+5 V	32 mA
+4.3 V	220 mA
-5 V	0 mA
External Power Supply	5.0±.25 Vdc, 325 mA (Excluding field load current)
Dimensions	
Space Required	1 slot
Weight	2.33 lbs (1.06 kg)
Terminal Connector	AS-8534-000
Fusing	One per group

AS-B828-016 Terminal Numbering and Wire Connections

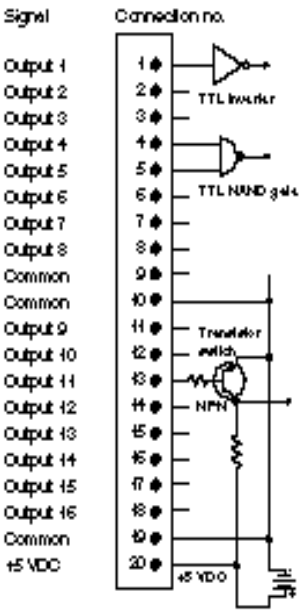

AS-B828-016 Mechanical Keying for Housings

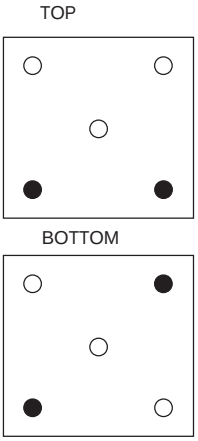

(When facing housing, place pins in holes shown by black circles.)

Specification	AS-B829-116
Description	5 V TTL input
Type of Operation	TTL
Number of Points	16
Operating Voltage	5 V TTL
Number of Groups	1
Inputs per Group	16
Max. Input Voltage	
Continuous	8 Vdc
Surge	15 Vdc for 10 ms
Max. Response Time	
OFF to ON	1 ms
ON to OFF	1 ms
Power Required	
+5 V	27 mA
+4.3 V	1 mA
-5 V	0 mA
External Power Supply	5.0 ±.25 Vdc, 325 mA
Dimensions	
Space Required	1 slot
Weight	2.26 lbs (1.03 kg)
Terminal Connector	AS-8534-000

AS-B829-116 Terminal Numbering and Wire Connections

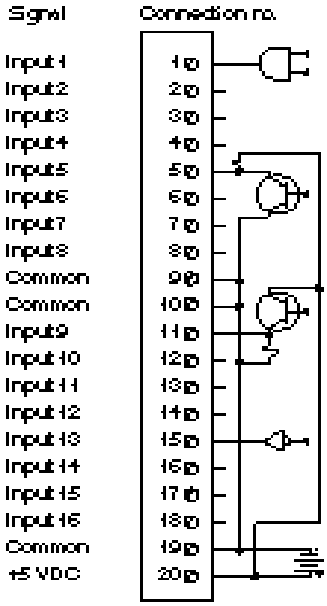

AS-B829-116 Mechanical Keying for Housings

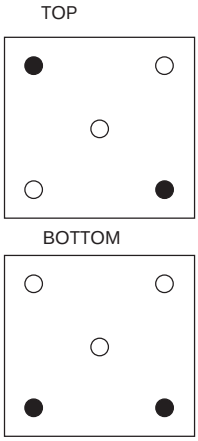

(When facing housing, place pins in holes shown by black circles.)

Specification	AS-B832-016
Description	24 Vdc True Low output
Number of Points	16
Operating Voltage	20 ... 28 Vdc
Number of Groups	2
Outputs per Group	8
ON Current	
Max. per Point	250 mA 1A for 10 ms
Max. per Group	2 A
Max. per Module	4 A
Leakage Current	0.5 mA (typical) @ 24 Vdc
Max. Response Time	
OFF to ON	1 ms
ON to OFF	1 ms
Power Required	
+5 V	32 mA
+4.3 V	235 mA
5 V	0 mA
External Power Supply	24±4 Vdc, 600 mA
Dimensions	
Space Required	1 slot
Weight	2.75 lbs (1.25 kg)
Terminal Connector	AS-8534-000
Fusing	One per module

AS-B832-016 Terminal Numbering and Wire Connections

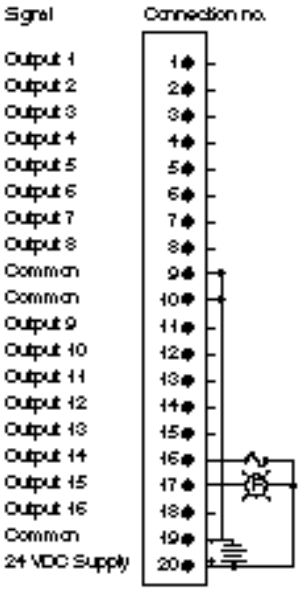

AS-B832-016 Mechanical Keying for Housings

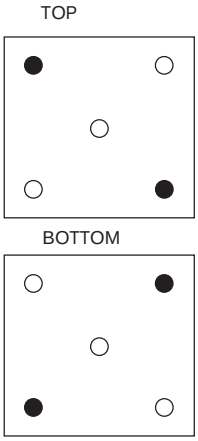

(When facing housing, place pins in holes shown by black circles.)

Specification	AS-B833-016
Description	24 Vdc True Low input
Type of Operation	True Low
Number of Points	16
Operating Voltage	20 ... 28 Vdc
Number of Groups	2
Inputs per Group	8
Max. Input Voltage	
Continuous	30 Vdc
Surge	500 Vdc for 3 ms
ON Conditions	< 200 Ω
OFF Conditions	> 10,000 Ω
Wetting Current	6 mA (typical) @ 24 Vdc
Max. Response Time	
OFF to ON	11 ms
ON to OFF	11 ms
Power Required	
+5 V	27 mA
+4.3 V	2 mA
-5 V	0 mA
External Power Supply	24 ±4 Vdc, 300 mA (Excluding field load current)
Dimensions	
Space Required	1 slot
Weight	2.75 lbs (1.25 kg)
Terminal Connector	AS-8534-000
Fusing	One per module

AS-B833-016 Terminal Numbering and Wire Connections

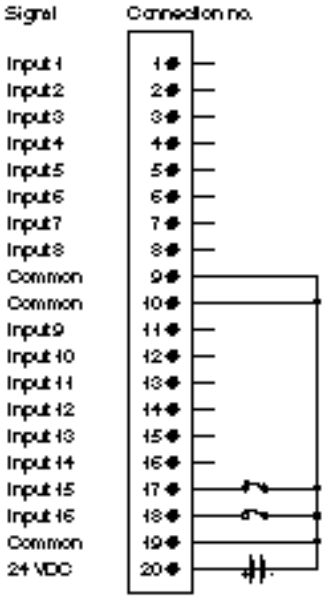

AS-B833-016 Mechanical Keying for Housings

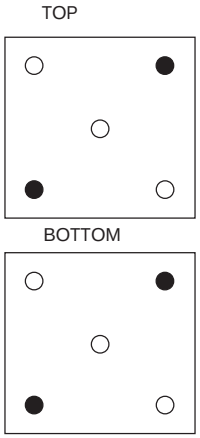

(When facing housing, place pins in holes shown by black circles.)

Specification	AS-B836-016
Description	12 ... 250 Vdc isolated output
Number of Points	16
Operating Voltage	12 ... 250 Vdc
Number of Groups	16
Outputs per Group	1
ON Current	
Max. per Point	0.75 A (typical) @ 250 Vdc 1 A (typical) @ 125 Vdc 1.5 A (typical) @ 48 Vdc
Max. per Module	8 A
Leakage Current	1mA (max.) @ 12 Vdc
Surge Current	5 A for 10 ms at repetition rate of 1 sec.
Max. Response Time	
OFF to ON	1 ms
ON to OFF	5 ms
Power Required	
+5 V	50 mA
+4.3 V	603 mA
-5 V	0 mA
Dimensions	
Space Required	1 slot
Weight	2.55 lbs (1.16 kg)
Terminal Connector	AS-8535-000
Fusing	One per group

AS-B836-016 Terminal Numbering and Wire Connections

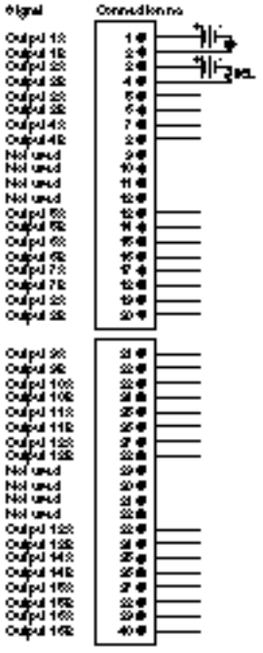

AS-B836-016 Mechanical Keying for Housings

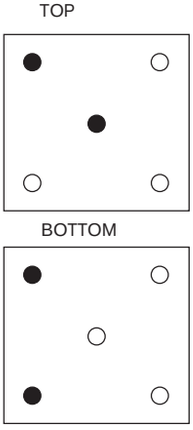

(When facing housing, place pins in holes shown by black circles.)

Specification	AS-B837-016
Description	24 Vac/DC input
Number of Points	16
Operating Voltage	20 ... 27 Vac/47 ... 63 Hz; 19 ... 30 Vdc
Number of Groups	2
Inputs per Group	8
Max. Input Voltage	
Continuous	27 Vac / 30 Vdc
Surge	32 Vac / 36 Vdc
ON Conditions	>20.4 Vac or 19.2 Vdc w/Inp Z of 1 K max.
OFF Conditions	< 6 Vac/ 10 Vdc < 27 Vac w/Inp Z > 15 K < 30 Vac w/Inp Z > 30 K
Wetting Current	7.5 mA (typical) @ 24 Vdc
Max. Response Time	
OFF to ON	6 ms
ON to OFF	18 ms
Power Required	
+5 V	40 mA
+4.3 V	1 mA
-5 V	15 mA
External Power Supply	24 Vac/DC, 300 mA
Dimensions	
Space Required	1 slot
Weight	2.75 lbs (1.25 kg)
Terminal Connector	AS-8534-000

AS-B837-016 Terminal Numbering and Wire Connections

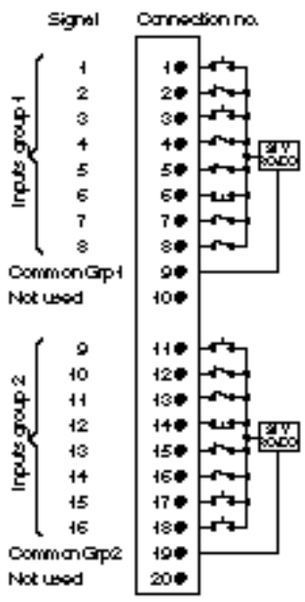

AS-B837-016 Mechanical Keying for Housings

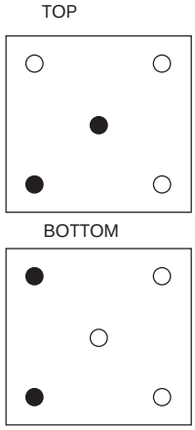

(When facing housing, place pins in holes shown by black circles.)

Specification	AS-B838-032
Description	24 Vdc True High output
Number of Points	32
Operating Voltage	20 ... 28 Vdc
Number of Groups	4
Outputs per Group	8
ON Current	
Max. per Point	0.5 A 2.5 A for .5 ms
Max. per Group	4 A
Max. per Module	12 A
Leakage Current	1 mA (typical) @ 30 Vdc
Max. Response Time	
OFF to ON	1 ms
ON to OFF	1 ms
Power Required	
+5 V	160 mA
+4.3 V	1 mA
-5 V	0 mA
External Power Supply	24 ±4Vdc, 125 mA (Excluding field load current)
Dimensions	
Space Required	1 slot
Weight	2.4 lbs (1.09 kg)
Terminal Connector	AS-8535-000

AS-B838-032 Terminal Numbering and Wire Connections

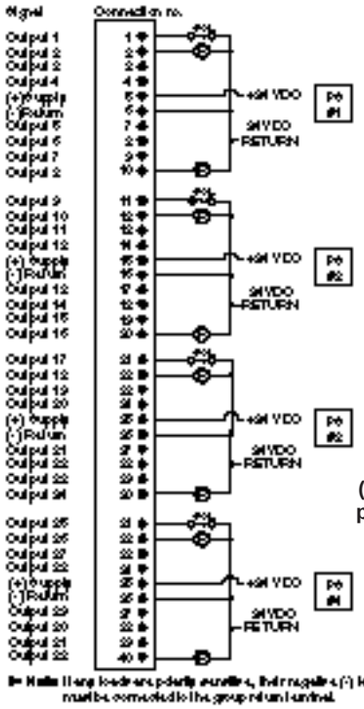

AS-B838-032 Mechanical Keying for Housings

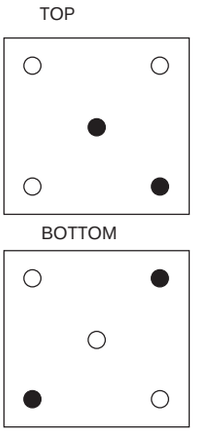

(When facing housing, place pins in holes shown by black circles.)

Specification	AS-B840-108
Description	Reed Relay (NO/NC) output
Number of Points	8
Operating Voltage	0 ... 300 Vdc; 0 ... 230 Vac / 47 ... 63 Hz
Number of Groups	8
Outputs per Group	1
ON Current	
Max. per Point	3 A continous 2 A switching current
Max. per Module	24 A
Switching Capability	100 vA
Max. Response Time	
OFF to ON	6 ms (2 ms typical)
ON to OFF	6 ms (2 ms typical)
Power Required	
+5 V	67 mA
+4.3 V	400 mA
5 V	0 mA
Dimensions	
Space Required	1 slot
Weight	2.62 lbs (1.19 kg)
Terminal Connector	AS-8534-000
Fusing	One per group

AS-B840-108 Terminal Numbering and Wire Connections

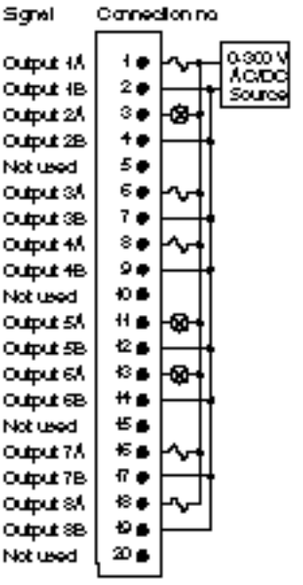

AS-B840-108 Mechanical Keying for Housings

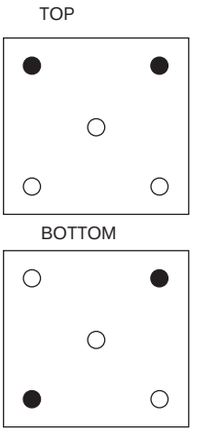

(When facing housing, place pins in holes shown by black circles.)

Specification	**AS-B846-001**
Description	Analog Input Multiplexer
Number of Channels	16, potential isolated to each other
Address Capacity	1 register out (channel select)
I/O Range	-10 to 10 Vdc (voltage)
Input Impedance	Equal to B873 or B875
Response Time	3 ms
Switching Behavior	Break before Make, switching time: 3 ms
Power Required	
+5 Vdc	65 mA
+4.3 Vdc	1 mA
-5 Vdc	0 mA
Dimensions	
Space Required	1 slot
Weight	2.55 lbs (1.16 kg)
Terminal Connector	AS-8535-000

AS-B846-001 Mechanical Keying for Housings

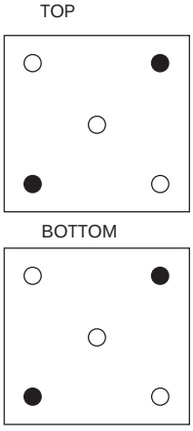

(When facing housing, place pins in holes shown by black circles.)

AS-B846-001 Terminal Numbering and Wire Connections

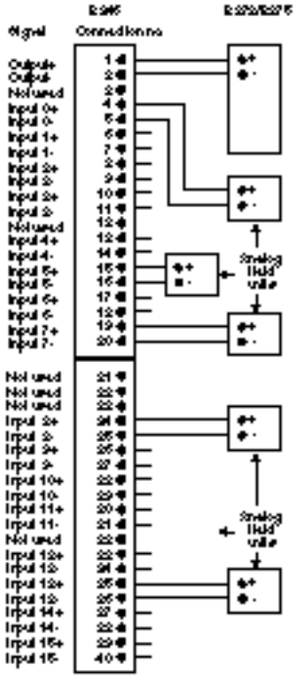

Specification	**AS-B846-002**
Description	Analog Input Multiplexer
Number of Channels	16, potential isolated to each other
Address Capacity	1 register out (channel select)
I/O Range	4 to 20 mA (current)
Input Impedance	250 Ω
Response Time	3 ms
Switching Behavior	Break before Make, switching time: 3 ms
Power Required	
+5 Vdc	65 mA
+4.3 Vdc	1 mA
-5 Vdc	0 mA
Dimensions	
Space Required	1 slot
Weight	2.55 lbs (1.16 kg)
Terminal Connector	AS-8535-000

AS-B846-002 Terminal Numbering and Wire Connections

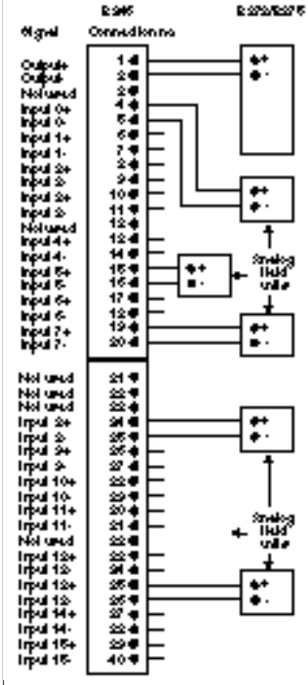

AS-B846-002 Mechanical Keying for Housings

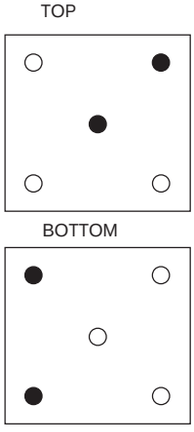

(When facing housing, place pins in holes shown by black circles.)

Specification	AS-B849-016
Description	48 Vac / DC input
Number of Points	16
Operating Voltage	41 ... 53 Vac / 47 ... 63 Hz; 39 ... 58 Vdc
Number of Groups	2
Inputs per Group	8
Max. Input Voltage	
Continuous	53 Vac / 58 Vdc
Surge	63 Vac / 70 Vdc for 10 sec 110 V for 10 ms
ON Conditions	> 41 Vac or 39 Vdc w/Inp Z of 1 K max.
OFF Conditions	< 15 Vac / 20 Vdc < 53 Vac w/Inp Z > 25 K < 58 Vac w/Inp Z > 50 K
Wetting Current	6.5 mA (typical) @ 48 Vdc
Max. Response Time	
OFF to ON	6 ms
ON to OFF	18 ms
Power Required	
+5 V	40 mA
+4.3 V	1 mA
5 V	15 mA
External Power Supply	48 Vac/DC, 200 mA
Dimensions	
Space Required	1 slot
Weight	2.75 lbs (1.25 kg)
Terminal Connector	AS-8534-000

AS-B849-016 Terminal Numbering and Wire Connections

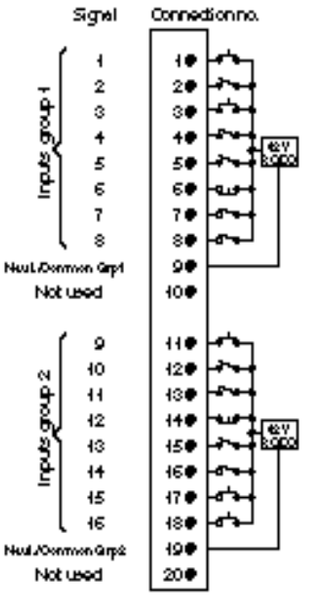

AS-B849-016 Mechanical Keying for Housings

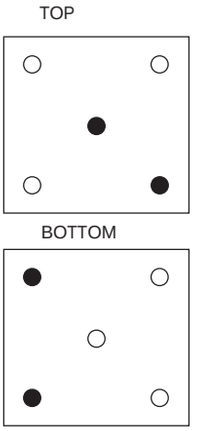

(When facing housing, place pins in holes shown by black circles.)

Specification	AS-B853-016
Description	115 Vac
Number of Points	16
Operating Voltage	80 ... 130 Vac / 47 ... 63 Hz;
Number of Groups	2
Inputs per Group	8
Max. Input Voltage	
Continuous	130 Vac
Surge	150 Vac
280 V for 10 ms	
ON Conditions	> 80 Vac
w/Inp Z of 1 K max.	
OFF Conditions	< 35 Vac
< 130 Vac w/Inp Z > 40 K	
< 150 Vac w/Inp Z > 80 K	
Wetting Current	6 mA (typical) @ 125 Vdc
Max. Response Time	
OFF to ON	6 ms
ON to OFF	18 ms
Power Required	
+5 V	40 mA
+4.3 V	1 mA
5 V	15 mA
Dimensions	
Space Required	1 slot
Weight	2.75 lbs (1.25 kg)
Terminal Connector	AS-8534-000

AS-B853-016 Terminal Numbering and Wire Connections

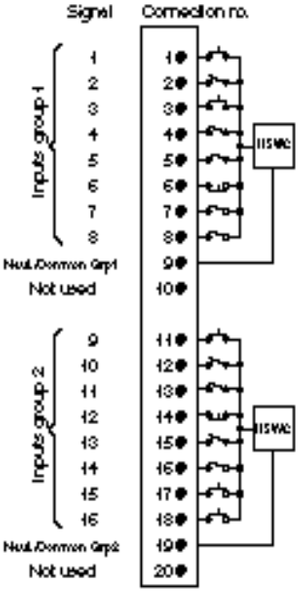

AS-B853-016 Mechanical Keying for Housings

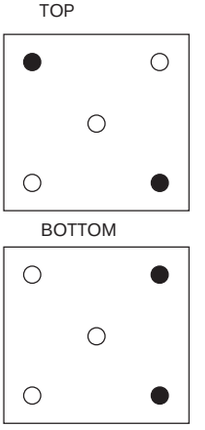

(When facing housing, place pins in holes shown by black circles.)

Specification	AS-B855-016
Description	12 Vdc intrinsically safe input
Mode of Operation	True Low
Number of Points	16
Operating Voltage	11.4 ... 12.6 Vdc
Number of Groups	1
Inputs per Group	16
Max. Input Voltage	
Continous	12 Vdc (±5%)
Surge	500 Vdc for 3 ms
ON Conditions	≤ 100 Ω total impedance
OFF Conditions	>100,000 Ω; 0 Vdc
Max. Response Time	
OFF to ON	1 ms
ON to OFF	5 ms
Power Required	
+5 V	80 mA
+4.3 V	1 mA
5 V	1.5 mA
External Power Supply	12 Vdc±5%, 1 A minimum
Dimensions	
Space Required	1 slot
Weight	2.4 lbs (1.1 kg)
Terminal Connector	AS-8535-000
Agency	Factory mutual 3610 (Requires use of key pins and MD-8741-000 barrier strip, included with module)

AS-B855-016 Terminal Numbering and Wire Connections

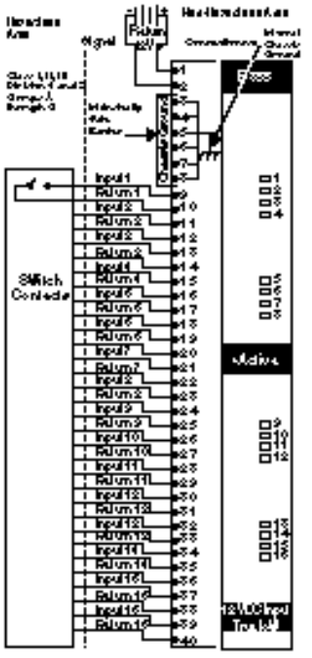

AS-B855-016 Mechanical Keying for Housings

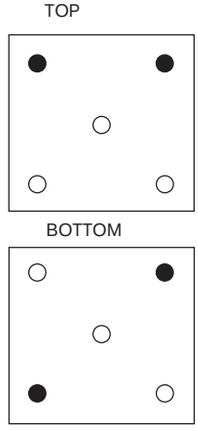

(When facing housing, place pins in holes shown by black circles.)

Specification	AS-B863-032
Description	24 Vdc hi-density monitored input
Type of Operation	True High
Number of Points	32
Operating Voltage	18 ... 30 Vdc
Number of Groups	2
Inputs per Group	16
Max. Input Voltage	
Continuous	30 Vdc
Surge	40 Vdc for 10ms
ON Conditions	8 ... 11 kΩ
OFF Conditions	6 ... 8 kΩ
Wetting Current	2 mA (typical) @ 24 Vdc
Max Response Time	
OFF to ON	10 ms
ON to OFF	10 ms
Power Required	
+5 V	250 mA
+4.3 V	0 mA
5 V	0 mA
External Power Supply	24±6 Vdc, 20 mA
Dimensions	
Space Required	1 slot
Weight	2.31 lbs (1.05 kg)
Terminal Connector	AS-8535-000

AS-B863-032 Terminal Numbering and Wire Connections

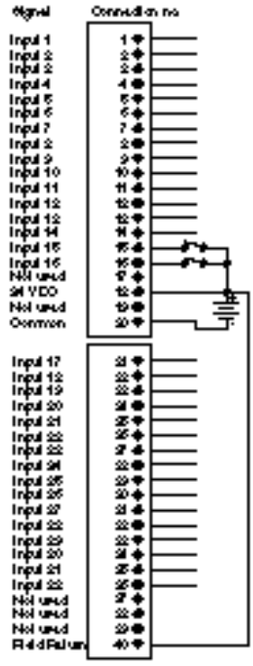

AS-B863-032 Mechanical Keying for Housings

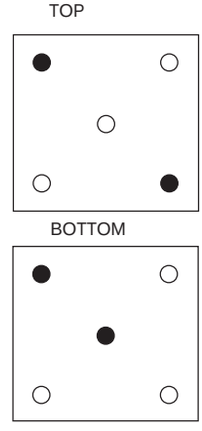

(When facing housing, place pins in holes shown by black circles.)

Specification	AS-B863-132
Description	24 Vdc Supervised wire input Senses & reports broken wire faults for each I/O point to PLC
Type of Operation	True High
Number of Points	32
Number of Groups	4 (8 inputs per group)
Reference Current	9 to 15 mA per group
Threshold Voltage	11 to 15 Vdc
Working Voltage	0 to 30 Vdc
Reference Voltage	19.2 to 30 Vdc
Input Current	1.8 to 3 mA low state 5.75 to 7.1 mA high state
Transition Time	
ON	Vin = 20 Vdc 200 ms minimum Vin = 30 Vdc 25 ms minimum
OFF	Vin = 20 Vdc 100 ms maximum Vin = 30 Vdc 250 ms maximum
Max. Response Time OFF to ON ON to OFF	2.0 ms, contact opening and/or closing 100 ms, fault detection time maximum
Power Required	
+ 5V	350 mA
+4.3V	10 mA
-5V	0mA (not used)
External Power Supply	30 Vdc maximum
Dimensions	
Space Required	1 slot
Weight	2 lbs (0.91 kg.)
Terminal Connector	AS-8535-000

AS-B863-132 Terminal Numbering and Wire Connections

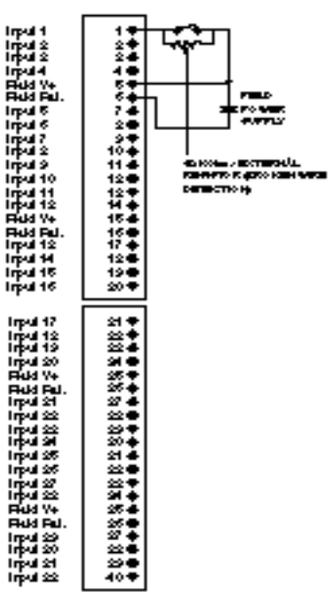

AS-B863-132 Mechanical Keying for Housings

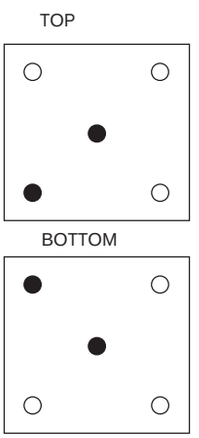

(When facing housing, place pins in holes shown by black circles.)

Specification	AS-B864-001
Description	TTL register ouput
Number of Points	8 channels, 16 data lines
Operating Voltage	5V TTL
Number of Groups	NA
Outputs per Group	NA
ON Current	
Max. per Point	NA
Max. per Group	NA
Max. per Module	NA
Leakage Current	NA
Max. Response Time	
OFF to ON	11.3 ms
ON to OFF	11.3 ms
Power Required	
+5 V	220 mA
+4.3 V	180 mA
-5 V	0 mA
Dimensions	
Space Required	1 slot
Weight	3.99 lbs (1.81 kg)
Terminal Connector	AS-8535-000

AS-B864-001 Terminal Numbering and Wire Connections

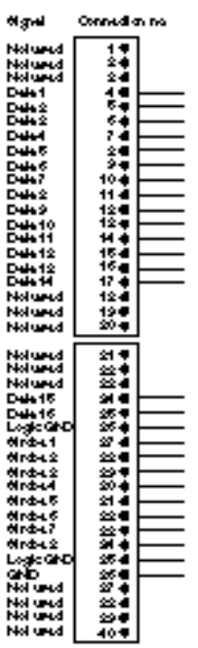

AS-B864-001 Mechanical Keying for Housings

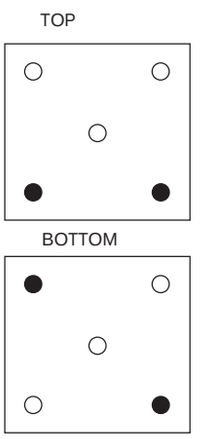

(When facing housing, place pins in holes shown by black circles.)

Specification	B865-001
Description	TTL register input
Number of Inputs	8 channels, 16 data lines
Operating Voltage	5 VTTL
Max. Response Time	
OFF to ON	20 ms
ON to OFF	20 ms
Power Required	
+5 V	400 mA
+4.3 V	600 mA
-5 V	0 mA
Dimensions	
Space Required	1 slot
Weight	2.75 lbs (1.25 kg)
Terminal Connector	AS-8535-000

B865-001 Terminal Numbering and Wire Connections

Pin Num	Signal	Pin Num	Signal
1	Not used	21	Not used
2	Not used	22	Not used
3	Not used	23	Not used
4	DATA01	24	DATA15
5	DATA02	25	DATA16
6	DATA03	26	Logic GND
7	DATA04	27	Strobe 1
8	DATA05	28	Strobe 2
9	DATA06	29	Strobe 3
10	DATA07	30	Strobe 4
11	DATA08	31	Strobe 5
12	DATA09	32	Strobe 6
13	DATA10	33	Strobe 7
14	DATA11	34	Strobe 8
15	DATA12	35	Logic GND
16	DATA13	36	GND
17	DATA14	37	Not used
18	DO	38	Not used
19	Not used	39	Not used
20	Not used	40	Not used

B865-001 Mechanical Keying for Housings

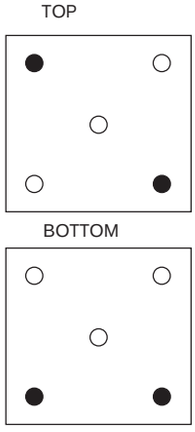

(When facing housing, place pins in holes shown by black circles.)

Specification	AS-B872-100
Description	D/A; 4 ... 20 mA
Number of Channels	4
Operating Range	4 ... 20 mA
Max. Loop Supply Voltage	60 Vdc
Resolution	12 bit
Accuracy	±0.1% of full scale at 25°C
Linearity	0 to 60°C, ±1 LSB
Update Times	<1 ms, all 4 channels
Isolation	
Channel to Channel	1000 V continuous
Channel to Case	1000 V continuous
Channel to Module	1000 V continuous
Power Required	
+5 V	475 mA
+4.3 V	5 mA
-5 V	0 mA
Dimensions	
Space Required	1 slot
Weight	3 lbs (1.4 kg)
Terminal Connector	AS-8535-000

AS-B872-100 Terminal Numbering and Wire Connections

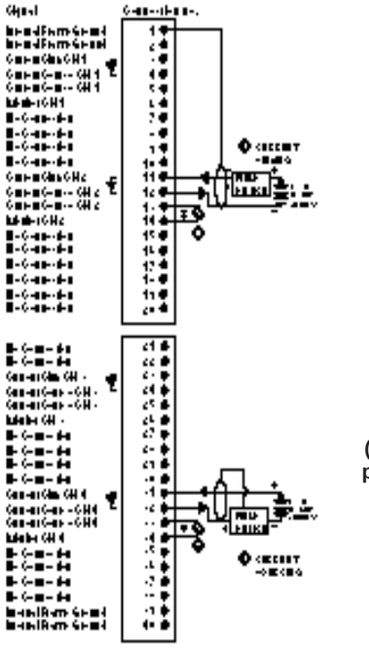

AS-B872-100 Mechanical Keying for Housings

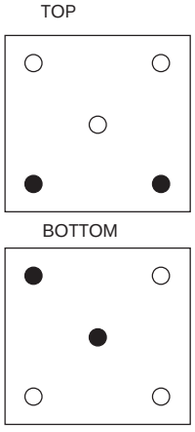

(When facing housing, place pins in holes shown by black circles.)

Specification	AS-B872-200
Description	D/A; ±10 Vdc, ±5 Vdc, 0 ... 10 Vdc, 0 ... 5 Vdc
Number of Channels	4
Operating Range	
Voltage	-10 to 10 Vdc; -5 to 5 Vdc; 0 ... 5 Vdc, 0 ... 10 Vdc, selectable per channel
Resolution	12 bit
Accuracy	±0.1% at 25°C ±0.17% at 0-60°C
Linearity	0 to 60°C, ±1 LSB
Update Times	<1 ms, all 4 channels
Isolation	
Channel to Channel	1000 V continuous
Channel to Case	1000 V continuous
Channel to Module	1000 V continuous
Power Required	
+5 V	750 mA
+4.3 V	5 mA
-5 V	0 mA
Dimensions	
Space Required	1 slot
Weight	3 lbs (1.4 kg)
Terminal Connector	AS-8535-000

AS-B872-200 Terminal Numbering and Wire Connections

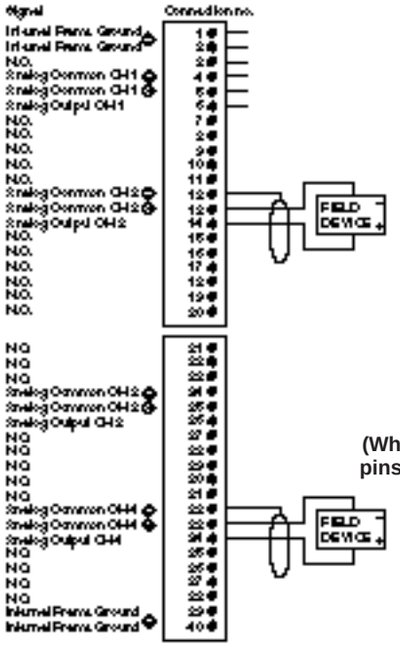

AS-B872-200 Mechanical Keying for Housings

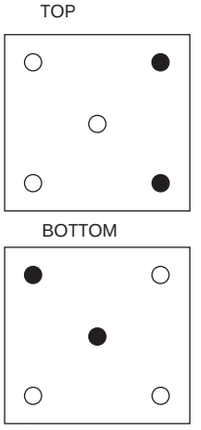

(When facing housing, place pins in holes shown by black circles.)

Specification	AS-B873-001
Description	A/D: 4 ... 20 mA; 1 ... 5 Vdc
Number of Channels	4
Operating Range	
Voltage/Current	1 ... 5 Vdc / 4 ... 20 mA
Impedance	1 MΩ (voltage mode) 250 Ω (current mode)
Resolution	12 bit
Accuracy	7 mV
Linearity	±.05% of full scale @ 25°C
Update Time	400 ms for 4 channels
Isolation	
Channel to Channel	250 Vac coninuous
Channel to Module	300 Vac continuous
Power Required	
+5 V	300 mA
+4.3 V	300 mA
-5 V	0 mA
Dimensions	
Space Required	1 slot
Weight	3.3 lbs (1.5 kg)
Terminal Connector	Included

AS-B873-001 Terminal Numbering and Wire Connections

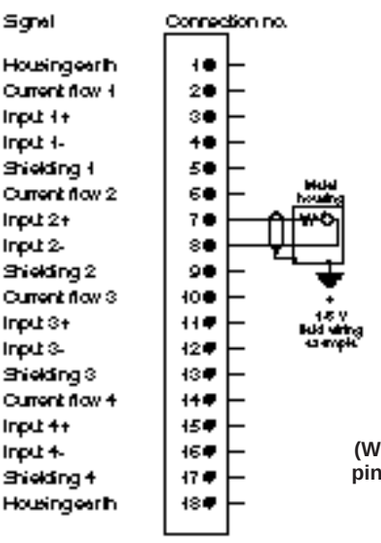

AS-B873-001 Mechanical Keying for Housings

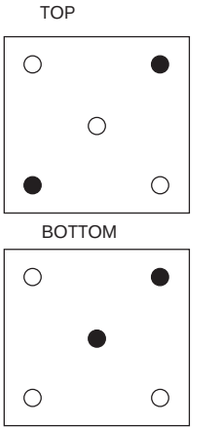

(When facing housing, place pins in holes shown by black circles.)

Specification	AS-B873-011
Description	A/D: -10 to 10 Vdc
Number of Channels	4
Operating Range	
Voltage/Current	-10 to 10 Vdc
Impedance	1 MΩ
Resolution	13 bit
Accuracy	17 mV
Linearity	±.05% of full scale @ 25°C
Update Time	400 ms for 4 channels
Isolation	
Channel to Channel	250 Vac continuous
Channel to Module	300 Vac continuous
Power Required	
+5 V	300 mA
+4.3 V	300 mA
-5 V	0 mA
Dimensions	
Space Required	1 slot
Weight	3.3 lbs (1.5 kg)
Terminal Connector	Included

AS-B873-011 Terminal Numbering and Wire Connections

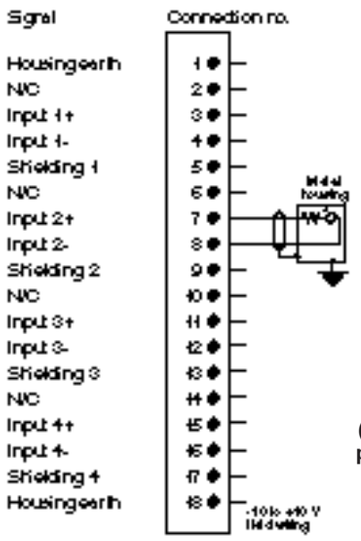

AS-B873-011 Mechanical Keying for Housings

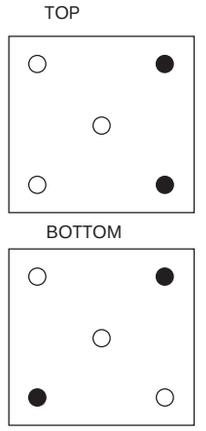

(When facing housing, place pins in holes shown by black circles.)

Specification	AS-B875-002
Description	A/D: 4 ... 20 mA; 1 ... 5 Vdc
Number of Channels	8
Operating Range	
Voltage/Current	1 ... 5 Vdc / 4 ... 20 mA
Impedance	1 MΩ (voltage mode) 250 Ω (current mode)
Resolution	12 bit
Accuracy	7 mV
Linearity	±.05% of full scale @ 25°C
Update Time	710 ms for 8 channels
Isolation	
Channel to Channel	250 Vac continuous
Channel to Module	300 Vac continuous
Transfer Times	
Power Required	
+5 V	300 mA
+4.3 V	300 mA
-5 V	0 mA
Dimensions	
Space Required	1 slot
Weight	3.3 lbs (1.5 kg)
Terminal Connector	Included

AS-B875-002 Terminal Numbering and Wire Connections

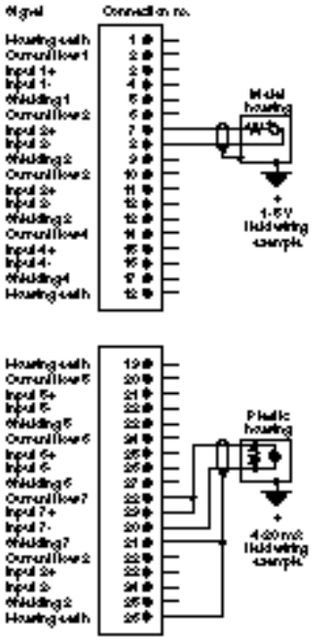

AS-B875-002 Mechanical Keying for Housings

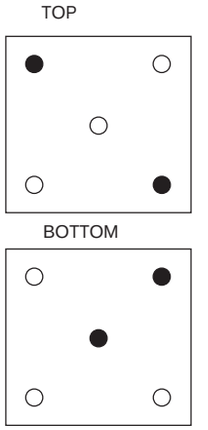

(When facing housing, place pins in holes shown by black circles.)

Specification	AS-B875-012
Description	A/D: -10 to 10 Vdc
Number of Channels	8
Operating Range	
Voltage/Current	-10 to 10 Vdc
Impedance	1 MΩ
Resolution	13 bit
Accuracy	17 mV
Linearity	±.05% of full scale @ 25°C
Update Time	710 ms for 8 channels
Isolation	
Channel to Channel	250 Vac continuous
Channel to Module	300 Vac continuous
Power Required	
+5 V	300 mA
+4.3 V	300 mA
-5 V	0 mA
Dimensions	
Space Required	1 slot
Weight	3.3 lbs (1.5 kg)
Terminal Connector	Included

AS-B875-012 Terminal Numbering and Wire Connections

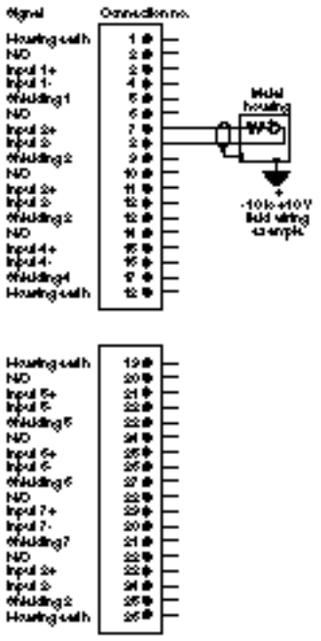

AS-B875-012 Mechanical Keying for Housings

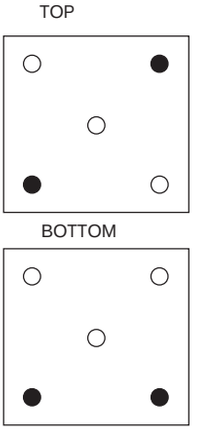

(When facing housing, place pins in holes shown by black circles.)

Specification	AS-B875-102
Description	Fast A/D: ±10 Vdc; ±5 Vdc; 0 ... 10 V; 0 ... 5 Vdc; 1 ... 5 Vdc user selectable
Number of Channels	4 or 8
Operating Range	
Voltage/Current	1 ... 5 Vdc / 4 ... 20 mA 0 ... 5 Vdc / 0 ... 20 mA 0 ... 10 V / 0 ... 40 mA -5 ... 5 V / -20 ... 20 mA -10 ... 10 V / -40 ... 40 mA
Output Impedance	10 MΩ (voltage mode) 250 Ω (current mode)
Resolution	12 bit
Accuracy	±0.1% of full scale @ 25°C
Linearity	±.02% of full scale @ 25°C
Update Time	2.4 ms for 4 channels 3.0 ms for 8 channels
Isolation	
Channel to Channel	30 Vac continuous
Channel to Module	1500 Vac for 1 minute
Power Required	
+5 V	650 mA
+4.3 V	975 mA
-5 V	0 mA
Dimensions	
Space Required	1 slot
Weight	4 lbs (1.8 kg)
Terminal Connector	Included

AS-B875-102 Terminal Numbering and Wire Connections

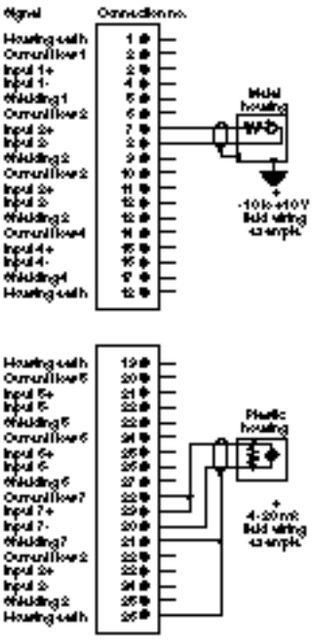

AS-B875-102 Mechanical Keying for Housings

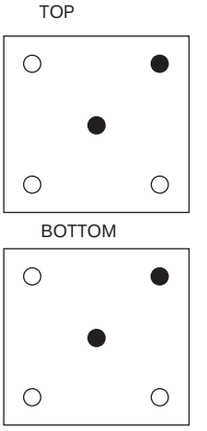

(When facing housing, place pins in holes shown by black circles.)

Specification	**AS-B875-111**
Description	A/D: 4 ... 20 mA; 1 ... 5 Vdc; -10 to 10 Vdc; 0 ... 20 mA; -5 to 5 Vdc
Number of Channels	8 differential or 16 single-ended (user selectable)
Operating Range	
Voltage/Current	-5 Vdc to +5 Vdc 0 to 5 Vdc 1 Vdc to 5 Vdc -10 Vdc to +10 Vdc 0 to 10 Vdc -20 mA to +20 mA 0 to 20 mA 4 to 20 mA
Output Impedance	> 10 MΩ (voltage mode) 250 Ω (current mode)
Resolution	14 bit
Accuracy	±0.1%
Linearity	±.05%
Update Time	
8 inputs	10 ms
16 inputs	20 ms
Isolation	
Channel to Channel	30 Vac
Channel to Module	1500 Vac for 1 minute
Power Required	
+5 V	500 mA
+4.3 V	900 mA
-5 V	0 mA
Dimensions	
Space Required	1 slot
Weight	3.52 lbs (1.6 kg)
Terminal Connector	AS-8535-000

AS-B875-111 Terminal Numbering and Wire Connections

8 Differential Inputs

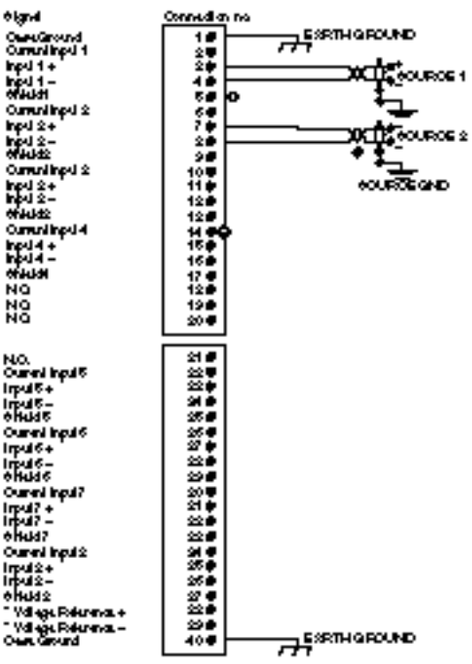

16 Single-Ended Inputs

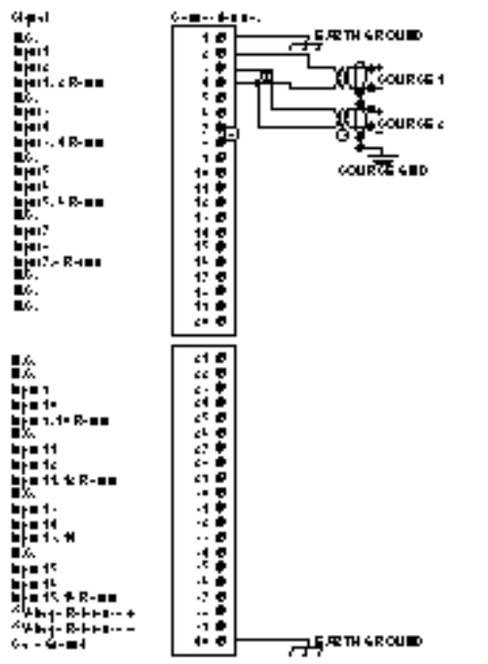

AS-B875-111 Mechanical Keying for Housings

TOP

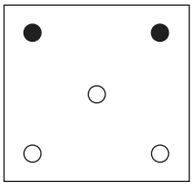

BOTTOM

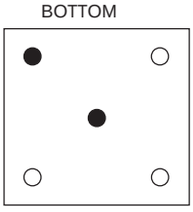

(When facing housing, place pins in holes shown by black circles.)

Specification	AS-B875-200
Description	A/D; Thermocouples, RTD Strain Gauges, 4 ... 20 mA Various Input Voltage Ranges
Number of Channels	4/8
Operating Range	Selectable per channel
Resolution	12 bit
Accuracy	
Calibration Accuracy	±.15% at 25° C
Non-Linearity	±.05%
Gain Drift	±.01%/° C
Zero Drift	±.002%/° C
Update Times	4 ms, all 4 channels
Isolation	
Channel to Channel	1500 V continuous
Power Required	
+5 V	< 600 mA
+4.3 V	< 10 mA
-5 V	0 mA
Dimensions	
Space Required	2 slots
Weight	3 lbs (1.4 kg)
Terminal Connector	AS-8535-000

AS-B875-200 Terminal Numbering and Wire Connections

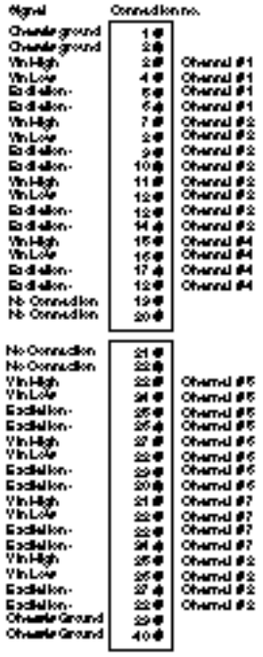

AS-B875-200 Mechanical Keying for Housings

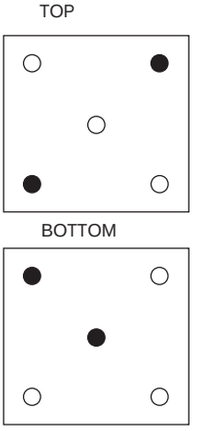

(When facing housing, place pins in holes shown by black circles.)

List of 5B Packs

Part Number	Description
Voltage Input, 4 Hz.	
AS-5B30001A	0 to +10 mV
AS-5B30002A	0 to +50 mV
AS-5B30003A	0 to +100 mV
AS-5B30004A	-10 to +10 mV
AS-5B30005A	-50 to +50 mV
AS-5B30006A	-100 to +100 mV
AS-5B31001A	0 to +1 V
AS-5B31002A	0 to +5 V
AS-5B31003A	0 to +10 V
AS-5B31004A	-1 to +1 V
AS-5B31005A	-5 to +5 V
AS-5B31006A	-10 to +10 V
Voltage Input, 10KHz.	
AS-5B40001A	0 to +10 mV
AS-5B40002A	0 to +50 mV
AS-5B40003A	0 to +100 mV
AS-5B40004A	-10 to +10 mV
AS-5B40005A	-50 to +50 mV
AS-5B40006A	-100 to +100 mV
AS-5B41001A	0 to +1 V
AS-5B41002A	0 to +5 V
AS-5B41003A	0 to +10 V
AS-5B41004A	-1 to +1 V
AS-5B41005A	-5 to +5 V
AS-5B41006A	-10 to +10 V
Current Input, 4 Hz.	
AS-5B32001A	4 to 20 ma
AS-5B32002A	0 to 20 ma
Thermocouple Input, Linear, 4 Hz.	
AS-5B47J01A	(Type J) 0 to +760°C
AS-5B47J02A	(Type J) -100 to +300°C
AS-5B47J03A	(Type J) 0 to +500°C
AS-5B47K04A	(Type K) 0 to +1000°C
AS-5B47K05A	(Type K) 0 to +500°C
AS-5B47T06A	(Type T) -100 to +400°C
AS-5B47T07A	(Type T) 0 to +200°C
AS-5B47E08A	(Type E) 0 to +1000°C
AS-5B47R09A	(Type R) +500 to +1750°C
AS-5B47S10A	(Type S) +500 to +1750°C
AS-5B47B11A	(Type B) +500 to +1800°C
RTD Input, Isolated, 4 Hz.	
AS-5B34P01A	-100 to +100°C
AS-5B34P02A	0 to +100°C
AS-5B34P03A	0 to +200°C
AS-5B34P04A	0 to +600°C
AS-5B34C01A	0 to +120°C, 10 Ω @ 0°C
AS-5B34C02A	0 to +120°C, 10 Ω @ 25°C
AS-5B34N01A	0 to +300°C
Strain Gauge, 10 KHz.	
AS-5B38002A	Full Bridge, 3 mV/V 300 Ω min.
AS-5B38004A	Half Bridge, 3 mV/V 300 Ω min.
AS-5B38005A	Full Bridge, 2 mV/V 300 Ω min.

Specification	AS-B881-001
Description	24 Vdc (LATCH) input
Type of Operation	True High
Number of Points	16
Operating Voltage	20 ... 28 Vdc
Number of Groups	1
Inputs per Group	16
Max. Input Voltage	
Continuous	30 Vdc
Surge	40 Vdc for 10ms
Wetting Current	6 mA (typical) @ 24 Vdc
Min. Pulse Width	0.5 ms
Repetition Rate	One per second
Power Required	
+5 V	30 mA
+4.3 V	1.1 mA
-5 V	0 mA
External Power Supply	24±4 Vdc, 310 mA
Dimensions	
Space Required	1 slot
Weight	2.75 lbs (1.25 kg)
Terminal Connector	AS-8534-000
Fusing	One per group

AS-B881-001 Terminal Numbering and Wire Connections

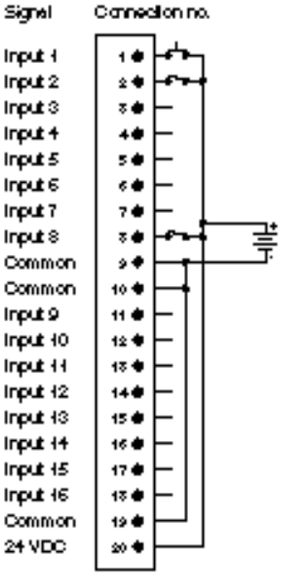

AS-B881-001 Mechanical Keying for Housings

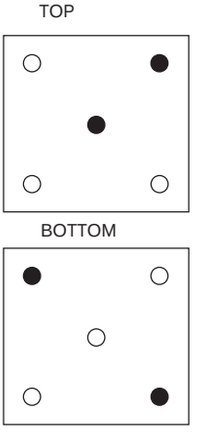

(When facing housing, place pins in holes shown by black circles.)

Specification	AS-B881-108
Description	115 Vac protected output
Number of Points	8
Operating Voltage	80 ... 130 Vac / 47 ... 63 Hz
Number of Groups	8
Outputs per Group	1
ON Current	
Max. per Point	2 A continuous 30 A for one cycle
Max. per Group	2 A
Max. per Module	16 A
Leakage Current	5 mA max @ 130 Vac
Max. Response Time	
OFF to ON	9 ms @ 60 Hz
ON to OFF	9 ms @ 60 Hz
Power Required	
+5 V	285 mA
+4.3 V	240 mA
-5 V	0 mA
Dimensions	
Space Required	1 slot
Weight	2.4 lbs (1.1 kg)
Terminal Connector	AS-8535-000

AS-B881-108 Terminal Numbering and Wire Connections

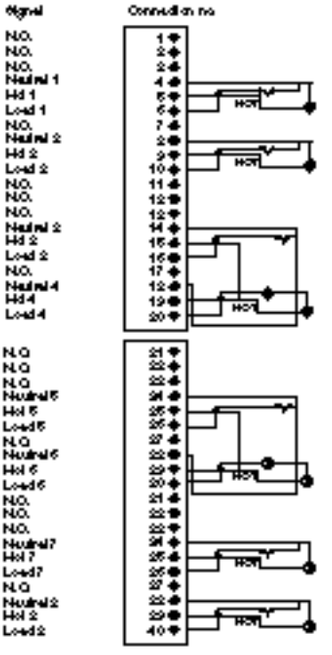

AS-B881-108 Mechanical Keying for Housings

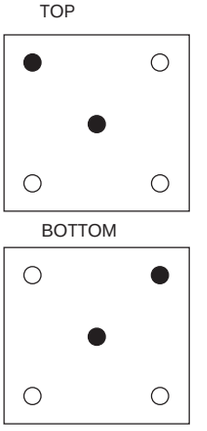

(When facing housing, place pins in holes shown by black circles.)

Specification	AS-B881-508
Description	125 Vdc True High output
Number of Points	8
Operating Voltage	5 ... 140 Vdc
Number of Groups	8
Outputs per Group	1
ON Current	
Max. per Point	4.0 A
Max. per Module	29 A
Leakage Current	< 30 mA
Max. Response Time	
OFF to ON	< 75 µs
ON to OFF	< 100 µs
Power Required	
+5 V	300 mA
+4.3 V	0 mA
-5 V	0 mA
External Power Supply	5 ... 140 Vdc
Dimensions	
Space Required	1 slot
Weight	2.4 lbs (1.1 kg)
Terminal Connector	AS-8535-000

AS-B881-508 Terminal Numbering and Wire Connections

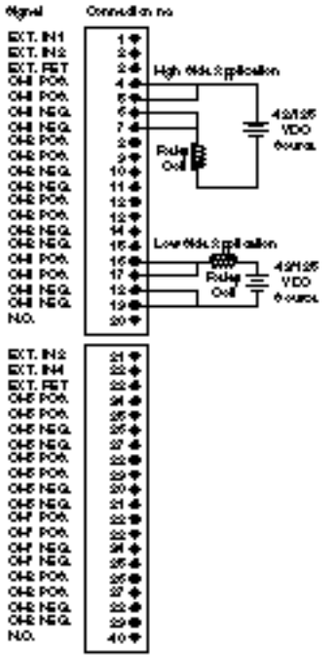

AS-B881-508 Mechanical Keying for Housings

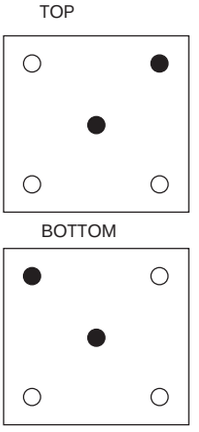

(When facing housing, place pins in holes shown by black circles.)

Specification	AS-B882-032
Description	24 Vdc diagnostic output
Number of Points	32
Operating Voltage	20 ... 28 Vdc
Number of Groups	4
Outputs per Group	8
ON Current	
Max. per Point	1 A
Max. per Group	6 A
Max. per Module	24 A
Leakage Current	1 mA max. @ 28 Vdc
Max. Response Time	
OFF to ON	1 ms
ON to OFF	1 ms
Power Required	
+5 V	300 mA
+4.3 V	10 mA
-5 V	0 mA
External Power Supply	24±4 Vdc, 600 mA (Excluding field load current)
Dimensions	
Space Required	1 slot
Weight	2.42 lbs (1.1 kg)
Terminal Connector	AS-8535-000
Fusing	Electronic, one-per point

AS-B882-032 Terminal Numbering and Wire Connections

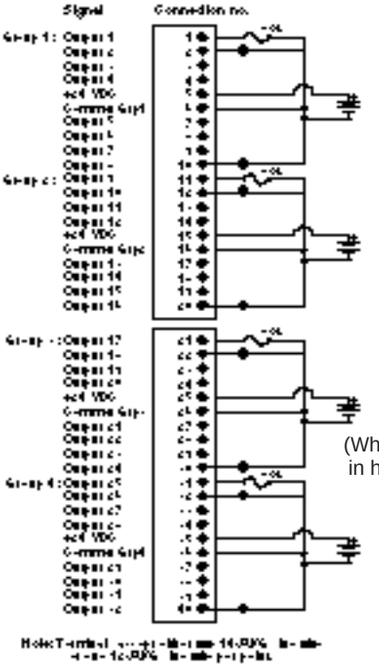

AS-B882-032 Mechanical Keying for Housings

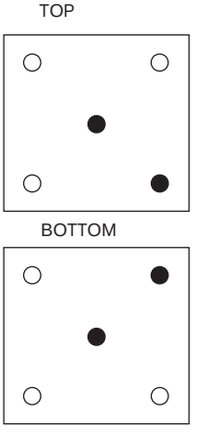

(When facing housing, place pins in holes shown by black circles.)

Specification	**AS-B882-116**
Description	24 Vdc Supervised wire output Detects open or short circuits on each I/O point and reports fault to PLC
Number of Points	16
Working Voltage	19.2 to 30.0 Vdc
Number of Groups	2
Outputs per Group	8
Continuous Current	
Max. Per Point	0.5 A
Max. Per Group	4.0 A
Max. Per Module	8.0 A
Off State Leakage Current	3 mA max. at 30 Vdc, max. allowable load resistance is 6K Ω
On State Voltage Drop	0.5 Vdc maximum at 0.5A
Inrush Current	1.0A peak for 0.1 ms at 4 pulses per second while carrying 0.5A DC minimum load current 10 mA
Power Required	
+5 Vdc	350 mA maximum all outputs ON
+4.3 Vdc	10 mA
-5 Vdc	0 mA (not used)
External Power Supply	Nominal 24 Vdc at external load current plus 0.5 amps. Supply must be capable of pulse current of external load plus 5 amps.
Dimensions	
Space Required	1 slot
Weight	2 lbs (0.91 kg)
Terminal Connector	AS-8535-000
Fusing	No internal fusing

*For additional details, consult user guide #GM-DISC-800.

AS-B882-116 Terminal Numbering and Wire Connections

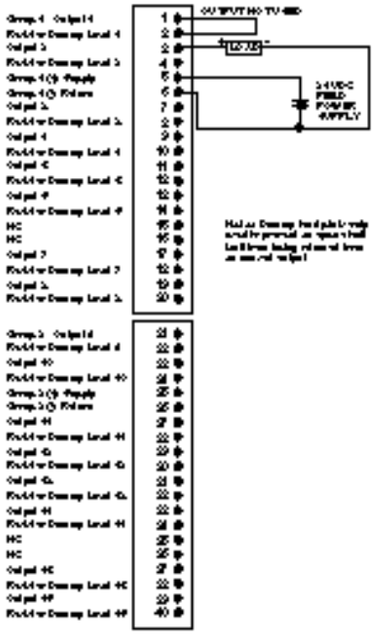

AS-B882-116 Mechanical Keying for Housings

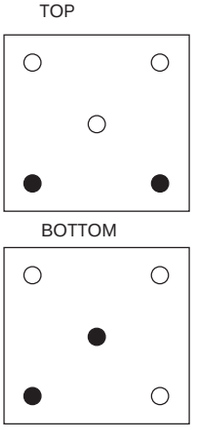

(When facing housing, place pins in holes shown by black circles.)

B882-239 High Speed Counter Module

The B882-239 High Speed Counter Module has two identical and independent counters for applications that require counting or comparisons. Because the module handles the counting within its own internal logic, the PLC is free to do other tasks.

Each counter counts to 9999, and the two counters can be cascaded to count to 99,999,999. Each counter counts up to 30,000 pulses per second. The module has two modes of operation, high frequency and low frequency, so its maximum count rate varies from 350 Hz (low frequency) to 30 KHz (high frequency).

Because the module acts independently of the PLC, it counts the high speed pulses from the field independently of the PLC scan. The counter automatically reports its current count to the PLC every scan. Where high performance is required, the module's own outputs can trigger independently of the controller scan.

The major features of the B882-239 High Speed Counter Module include:

- Two independent counters (0-32 Vdc, True Low)
- 0-30 Khz operation with selectable low frequency filter
- Six auxiliary field inputs (0-32 Vdc, True Low)
- Six field outputs (0-32 Vdc, True Low)
- Self-diagnostics

Specifications	**AS-B882-239**
Number of Counters	2
Number of Auxiliary Inputs	6
Number of Outputs	6
Number of Groups	1
Input Voltage Range	0-32 Vdc
Input Current	8.1 mA with 32 Vdc supply 5 mA with 28 Vdc supply
Output ON Voltage	1.0 Vdc (max.) @ 0.5 A 0.3 Vdc (typ.) @ 0.5 A 0.4 Vdc (max.) @ 0.1 A 0.2 Vdc (typ.) @ 0.1 A
Output OFF Leakage Current	1.0 mA (max.) @ 32 Vdc
Output Load Current	0.5 A continuous per output 1.5 A fusing per group
Max. Count Frequency	
High Frequency Mode	30 KHz
Low Frequency Mode	350 Hz
Reset Pulse Width	13 µs (min.)
Enable Set Up Time	
High Frequency Mode	11 µs (max.)
Low Frequency Mode	1.3 µs (max.)
Range of Signal Values	
-Log "1" Neg. Threshold	1.1 Vdc (min.), 2.2 Vdc (typ.)
-Log "0" Pos. Threshold	3.5 Vdc (max.), 2.7 Vdc (typ.)
-Hysteresis	0.36 Vdc (min.), 0.49 Vdc (typ.)
Power Required	
+ 5 Vdc	188 mA
+ 4.3 Vdc	0 mA
-5 Vdc	0 mA
Dimensions	
Space Required	1 slot
Weight	2.94 lbs (1.34 kg)
Terminal Connector	Included
Fusing	One per group

AS-B882-239 Terminal Numbering and Wire Connections

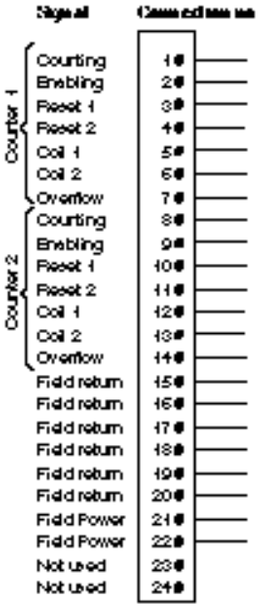

AS-B882-239 Mechanical Keying for Housings

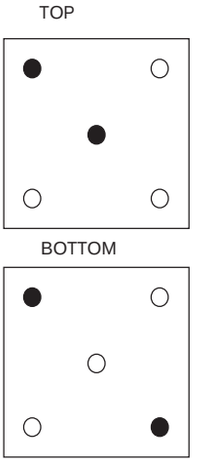

(When facing housing, place pins in holes shown by black circles.)

Specifications	AS-B883-001
Number of Counters	2
Number of Auxiliary Inputs	6
Number of Outputs	3
Voltage Range	
5 Vdc	2.4 to 5.5 Vdc
12 Vdc	6 to 16 Vdc
24 Vdc	12 to 32 Vdc
Transition	0 to 1 1 to 0
5 Vdc	2.4 Vdc 1.6 Vdc
12 Vdc	5.6 Vdc 4.0 Vdc
24 Vdc	11.2 Vdc 8.0 Vdc
Output Load Current	At 5 Vdc, 140 mA per output
Max Count Frequency	50 kHz
Ramp Time	7 V per sec
Power Required	
+ 5 Vdc	677 mA
+ 4.3 Vdc	0 mA
-5 Vdc	0 mA
Dimensions	
Space Required	1 slot
Weight	3.3 lbs (1.49 kg)
Terminal Connector	Included

AS-B883-001 Terminal Numbering and Wire Connections

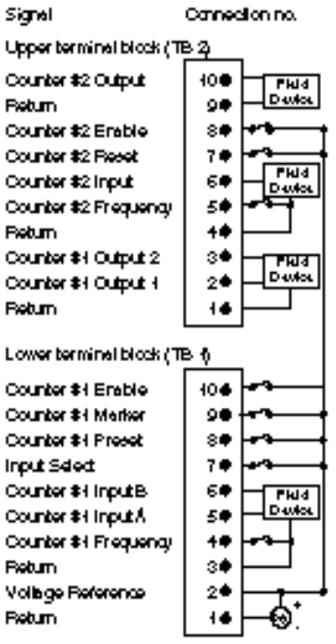

AS-B883-001 Mechanical Keying for Housings

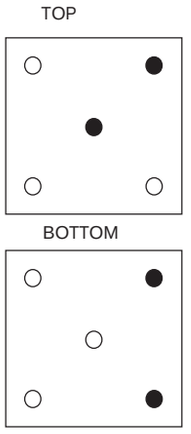

(When facing housing, place pins in holes shown by black circles.)

B883-001 High Speed Counter Module

The Modicon B883-001 High Speed Counter Module is a powerful control tool providing solutions for both simple high speed counting and more involved timing and sampling control applications, all at speeds up to 50 kHz.

While programmed directly through a Modicon programmable controller, the High Speed Counter Module is microprocessor-based and operates independent of the PLC. The module provides two counters that can operate separately or jointly, depending on the control system's needs.

Counter #1	Counter #2
Bi-direction (up/down) count	Unidirectional up counter
Pulse or Quadrature encoder input modes	1 kHz and 1 MHz internal clock
Counts up to 9,999,999	Counts up to 9,999
Two programmable outputs with three modes of operation	Hardwire reset and enable
Hardwire enable and preset	Software reset and enable
Software enable and preset	Programmable match output

B883-101 and B883-111 CAM Emulator Modules

The B883-101 and B883-111 CAM emulator modules are used to automate the operation of metal shaping and cutting presses for any mass production industry such as automobile parts fabrication.

The CAM module receives a 12-bit (plus control) parallel position code from an encoder. The module then transmits an 8-bit parallel control code to its discrete outputs based on the received position data.

Programming and operation of the CAM module is simple. You load the operating instructions into a CAM module through the PLC via the I/O system. You can define up to 16 output intervals distributed at random among the 8 outputs. The CAM module accepts inputs in binary, binary coded decimal, or Gray code. Once programmed, the module receives, processes, and outputs the position codes at a rate of 4,000 Hz (once every 250 microseconds).

If your application requires velocity compensation, choose the B883-111 module. The B883-111 module compensates for changes in velocity.

Specifications	AS-B883-101/111
Number of Inputs	12
Number of Outputs	8
Supply Voltage	Max. 7 Vdc
Internal Signal Loading	RTH = 10 kΩs VTH = 0.925 x VDD, (VDD = 5 Vdc ± 5%)
Working Voltage	20 to 28 Vdc
Peak Voltage	32 Vdc max for 10 ms
ON State Voltage Drop	0.6 Vdc max at 200 mA one channel on
Inrush Current	Max. 2.5 A per channel 0.5 ms at 5% duty cycle
OFF State Leakage Current	Max. 0.75 mA at 28.8 Vdc Typ. 0.1 mA
Response Time	Max. 20 ms
Transition Time	Max. 32 ms
Power Required	
+5 Vdc	1000 mA
+4.3 Vdc	0 mA
–5 Vdc	0 mA
Dimensions	
Space Required	1 slot
Weight	3.98 lbs (1.81 kg)
Terminal Connector	Included

AS-B883-101/111 Terminal Numbering and Wire Connections

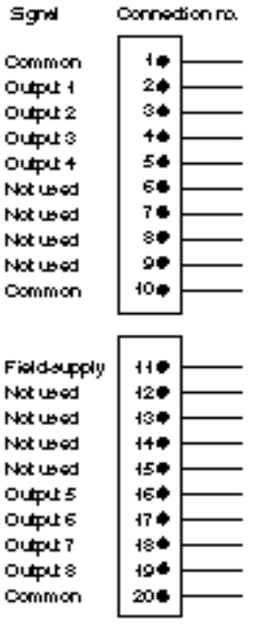

AS-B883-101/111 Mechanical Keying for Housings

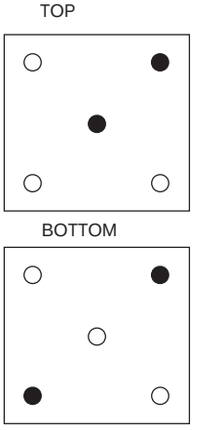

(When facing housing, place pins in holes shown by black circles.)

37 Pin 'D' Male Connector

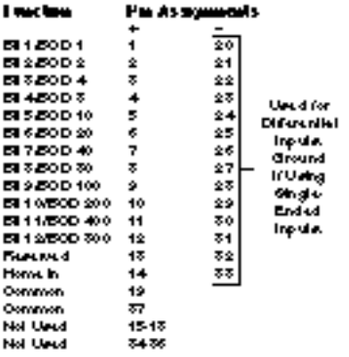

Specifications	AS-B883-200
Description	Thermocouple input Type B,E,J,K,R,S,T,N or linear mV
Inputs per Module	10
Max. Common Mode Voltage	200 Vdc/Vac (peak)
Resolution	1°C, 1°F, 10 mV
Under Program Control	0.1°C, 0.1°F, 1 mV
Update Time	100 ms per selected channel 1 sec. max. all channels
Power-up Time	13 sec. max.
Warm-up Time	2 Min. max.
Power Required	
+5 Vdc	400 mA
+4.3 Vdc	5 mA
-5 Vdc	0 mA
Dimensions	
Space Required	1 slot
Weight	4 lbs (1.8 kg)
Terminal Connector	Included

AS-B883-200 Terminal Numbering and Wire Connections

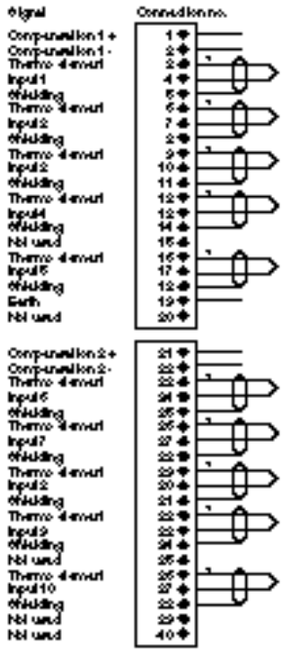

AS-B883-200 Mechanical Keying for Housings

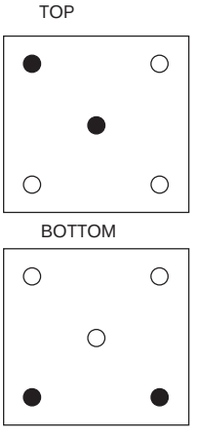

(When facing housing, place pins in holes shown by black circles.)

B883-200 Thermocouple Input Module

The Modicon B883-200 Thermocouple Input Module is a smart I/O module that multiplexes up to ten thermocouples into three consecutive input registers of the control system.

Each B883-200 module provides reference junction temperature compensation, open circuit detection, and linearization for ten thermocouples. Also built-in are self-calibration, internal diagnostics, and 800-Series bus diagnostics.

Any mix of type B, E, J, K, R, S, T, or N thermocouple operations or simple -20 to +80 mV input operations may be set by the user under program control.

For thermocouple inputs, the PLC can access individual temperature readings in degrees Centigrade, Fahrenheit, or in compensated millivolts. Each time the PLC scans the B883-200 module, it receives the specified temperature or millivolt reading along with open-circuit and module health data. The thermocouple wire is terminated on a special isothermal connector assembly on the housing. Each B883-200 module uses three consecutive input registers and three output registers.

B883-201 RTD Input Module

The Modicon B883-201 Resistance Temperature Detector (RTD) module is a smart I/O module that multiplexes up to eight two- or three-wire RTDs into three consecutive input registers of a control system.

Each B883-201 module provides linearization for any mix of 8 RTDs. Also built-in are self-calibration, internal diagnostics, and 800-Series bus diagnostics.

American standard platinum, European standard platinum per DIN, or linear resistance input can be selected by the user under program control.

When an RTD is selected, the PLC can access each individual temperature reading in Centigrade, Fahrenheit, or in compensated millivolts. Each time the PLC scans the B883-201 module, it receives the specified temperature or millivolt reading along with open-circuit and module health data.

Each B883-201 uses three consecutive input registers and three output registers. These registers are assigned to the same slot within the channel.

Specifications	**AS-B883-201**
Description	RTD input American or European 100 Ω Platinum
Inputs per Module	8
Max. Common Mode Voltage	7 Vdc/Vac (peak)
Resolution	1°C, 1°F, 10 Ω
Under Program Control	0.1°C, 0.1°F, 1 Ω
Update Time	125 ms per selected channel 1 sec. max. all channels
Power-up Time	13 sec. max.
Warm-up Time	2 min. max.
Power Required	
+5 Vdc	640 mA
+4.3 Vdc	5 mA
-5 Vdc	0 mA
Dimensions	
Space Required	1 slot
Weight	4 lbs (1.8 kg)
Terminal Connector	AS-8535-000

AS-B883-201 Terminal Numbering and Wire Connections

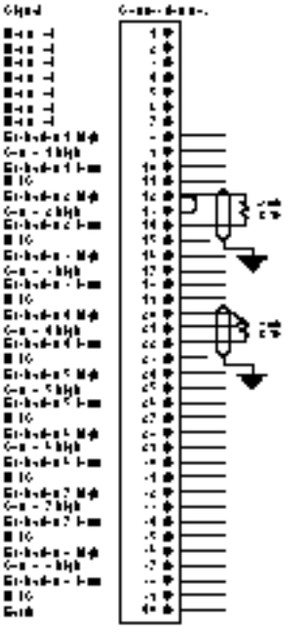

AS-B883-201 Mechanical Keying for Housings

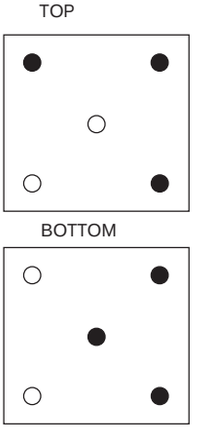

(When facing housing, place pins in holes shown by black circles.)

Specifications	AS-B884-002
Analog Inputs	**4, current/voltage**
Input Range	4 ... 20 mA, 1 ... 5 Vdc, 0 ... 10 Vdc
Common-mode Rejection	> -90 db, 50/60 Hz
Max. Common-mode Voltage	180 Vdc/Vac peak
Normal Mode Rejection	60 db
Accuracy (at 25° C)	0.05% typ, +0.02% max
Thermocouple Inputs	**2**
Types	B,E,J,K,N,R,S,T
Common-mode Rejection	> -120 db, 50/60 Hz
Max. Common-mode Voltage	180 Vdc/Vac peak
Normal Mode Rejection	60 db
Repeatability (constant temp.)	+0.5° F, +0.3° C in 24 hours
Frequency Inputs	1, sine wave/magnetic pick-up (bipolar) and rectangular wave (unipolar)
Input Voltage Range	
Unipolar	2 Vpp to 50 Vpp
Bipolar	10 mVpp to 360 Vpp
Discrete inputs	**2**
Input Voltage	24 Vdc, potential isolated
ON Threshold	5.0 Vdc or more
OFF Threshold	0.8 Vdc or less
Min. Turn On Current	5 mA
Analog outputs	**2, current voltage**
Output Range	4 ... 20 mA, 1 ... 5 Vdc, 0 ... 10 Vdc
Common-mode Rejection	> -120 db, 50/60 Hz
Max. Common-mode Voltage	180 Vdc/Vac peak
Accuracy (at 25° C)	0.2% max, 0.05% typ
Output Setting Time	< 10 ms
Discrete Outputs	**2**
Output Voltage	24 Vdc, potential isolated
Output Current	250 mA, 1 V drop max
OFF State Leakage	0.1 mA max
Loop Solve Time	150 ms
Power Required	
+5 Vdc	50 mA
+4.3 Vdc	2 mA
-5 Vdc	0 mA
External Power Supply	24±4 Vdc, 330 mA
Dimensions	
Space Required	1 slot
Weight	4 lbs (1.81kg)
Terminal Connector	Included

B884-002 PID Module

The B884-002 PID Module provides two completely independent and separate Proportional Integral Derivative (PID) loops. You can configure the PID loops for control strategies including open loop, closed loop, PID, PID on error squared, and cascade control.

You configure the PID module using a configuration program (Part # SW-B8DD-3DA) on an IBM or compatible personal computer. You can download the data either through the PLC or directly to the modules, where it is stored in a non-volatile EEPROM memory.

To ensure the highest accuracy and reliability, the module has fully floating, isolated, and protected inputs and outputs. The module has seven independently configured analog inputs (4 voltage/current, 2 thermocouple, 1 frequency), two analog outputs, two discrete inputs, and two discrete outputs. Each loop is assigned two voltage and one thermocouple inputs. There is no need for any analog adjustments such as trimpots for zero, offset, or span, which results in superior accuracy, stability, and reliability.

AS-B884-002 Terminal Numbering and Wire Connections

AS-B884-002 Mechanical Keying for Housings

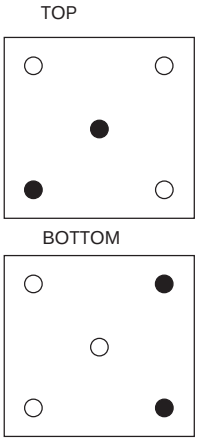

(When facing housing, place pins in holes shown by black circles.)

B885-002 ASCII / BASIC Module

The B885-002 ASCII / BASIC Module runs user-written BASIC programs independently of the controller's memory logic and scan. It also performs READ and WRITE commands to and from serial devices connected to either of the module's two RS 232/422 ports (jumper selectable). In addition, its real-time clock/calendar allows the module to run a BASIC program or flag and return a value to the PLC at a user specified date and time.

The module provides report generation, interactive operator interface, high level math, peripheral communications, and data storage.

Using a dumb terminal or an IBM personal computer with Emulator Software (Part # SW-E885-1DA), you program the module's 53K of user memory. If you need more memory, you may provide an additional 32K of user EPROM. You can designate part of the memory as retentive variable memory to store formulas or other process parameters.

Specifications	**AS-B885-002**	
Data Exchange		
Module to PLC	Via OURBUS, 6 input registers, 6 output registers	
Module to Terminal	Via 2 ports, RS 232C or RS 422	
Transmission Rate	110, 300, 600, 1200, 2400, 4800, 9600, 19200 baud software selectable	
Power Required	RS 422 mode	RS 232 mode
+5 Vdc	500 mA	400 mA
+4.3 Vdc	1760 mA	1000 mA
-5 Vdc	0 mA	0 mA
Dimensions		
Space Required	1 slot	
Weight	3 lbs (1.4 kg)	
Terminal Connector	Included	

AS-B885-002 Terminal Numbering and Wire Connections

Pin #	Direction	Signal
1	N/A	Protective ground
2	OUT	RS232 Send data
3	IN	RS232. Receive data
4	OUT	RS232 Request to send
5	IN	RS232 Clear to send
6	IN	RS232 Data set ready
7	N/A	RS232 & RS422 Common
12	OUT	RS422 Request to send high
13	OUT	RS422 Request to send low
14	OUT	RS422 Send data high
15	OUT	RS422 Send data low
16	IN	RS422 Clear to send low
17	IN	RS422 Clear to send high
18	OUT	+5V (Current limited, 5mA by 1K)
19	IN	Select input-RS422 high/ RS232 low
20	OUT	RS232 Data terminal ready
21	IN	RS422 Receive data high
25	IN	RS422 Receive data low

AS-B885-002 Mechanical Keying for Housings

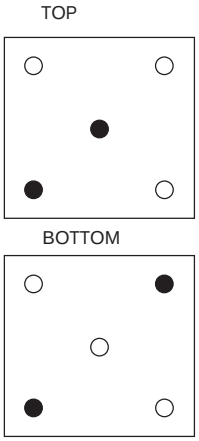

(When facing housing, place pins in holes shown by black circles.)

B885-101 and B885-111 Motion Modules

Modicon B885-1xx Motion Modules are high performance, single axis servo motion controllers contained in a single-width 800-Series I/O module. They are designed to plug directly into the I/O rack of the Modicon 984 PLC, although they are capable of standalone operation. They can control brushless and brush-type servo motors, as well as hydraulics.

The modules use Schneider Automation's patented Direct Numerical Processing (DNP) technology. Advanced digital brushless motion control eliminates potentiometer adjustments and analog velocity loops for optimal control.

The B885-101 module uses a resolver to provide feedback for the position, velocity, and commutation of the motor. Essentially, a rotary brushless transformer that provides absolute position information to the motion module, the resolver gives the module a high degree of noise immunity.

The B885-111 module additionally has two quadrature encoder interfaces for extra position and velocity feedback.

Control communication interface to the B885-1xx modules can be either through the 800 I/O system backplane or the Modbus/RS-232 serial port. The module is designed to work directly with the Modicon Cyberline 1000 series brushless servo amplifiers as well as those of third-party vendors.

The PLC communicates with the motion modules through six input and six output registers with the control instructions providing a powerful, smooth and fast link between the two. Adjustable command buffering and direct register to function bits provide added communication speed for high response functions.

Motion programs, developed using MMDS, are either stored directly in the flash memory of the motion module or as registers in the PLC.

The Modicon Motion Development Software (MMDS) is an on-line/off-line, menu driven package (Part # SW-MMDS-1DB) for the IBM-AT or compatible computers. It enables the user to set up, program, operate and diagnose operation of the motion module. The program and file manipulation features are a versatile system for application management. The MMDS communicates via a computer serial port to the Modbus port on the motion module.

AS-B885-1xx Mechanical Keying for Housings

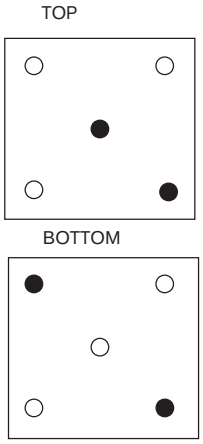

(When facing housing, place pins in holes shown by black circles.)

AS-B885-111 Encoder Feedback Signal Wiring to Breakout Module

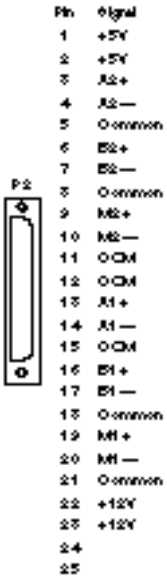

AS-B885-1xx Terminal Numbering and Wire Connections

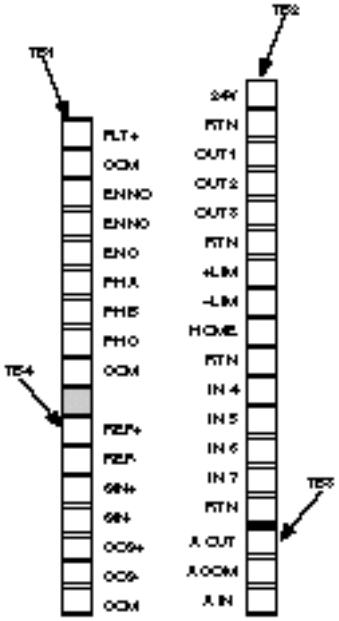

Specifications	AS-B885-1xx
Motion	
Absolute Positioning Range	2^{32} bits; in., mm, or other units
Speed Range	2^{32} to 1; counts/sec, in/sec, mm/sec, RPM, etc.
Digital Servo Loop	
Position Loop Update	1 msec
Velocity Loop Update	0.5 msec
Commutation Update	0.25 msec
Potentiometer Adjustments	None; parameters set in software
Feedback	
Resolver	Modicon "T" type brushless Used for position, velocity and commutation
Max. Speed	6,000 RPM, motor/drive dependent
Resolution	65535 (16-bit) counts/revolution (maximum)
System Accuracy	
Typical	±10 arcmin
Worst Case	±15 arcmin
Position Repeatability	±3 arcmin
Encoder (-110 only, two channels)	Encoders supplied by customer. Used for position and velocity
Type	Differential or single end
Voltage	5 ... 24 volt ± 20%
Impedance	>500 Ω @ 5V nominal
Frequency	
Nominal	200 KHz
Maximum	500 KHz
Input Multiplier	4X
Maximum Speed	Encoder dependent, 2 MHz internal pulse rate max.
System Accuracy	Encoder dependent; 0.5 arcmin maximum
Source Power Supplied by Module (Encoder may be powered externally)	400 mA @ 5 Vdc ± 10% and/or 200 mA @ 12 Vdc ± 10%
Servo Output	3-phase bipolar commutated current command compatible with all Modicon Cyberline drives or Bipolar current or velocity command (±10 V, 3 mA max., 12 bit resolution) for DC or hydraulic drives
Drive Enable Output	Form "C" relay contact, 30 Vdc @ 0.5 A resistive max.
Drive Fault Input	True high with internal pullup, TTL compatible
I/O	
Digital Inputs	7 (24 Vdc, ±20 %)
Digital Outputs	3 (24 Vdc, ±20 %, 150 mA max. each)
Analog Output	±10 V, 3 mA max., 12 bit resolution
Analog Input	±10 V, 10 bit resolution
Communications	
Port	RS-232 serial, Modbus slave
Baud Rate	300 ... 9600 baud, software selectable (9600 default)
Connector	DB9, female
Backplane	I/O bus, 6 input/6 output registers
Power Requirements	
External Power Supply	24 Vdc ±20% @ .375 A max. plus output current draw
I/O Rack Power	
+5.0 V	25 mA
+4.3 V	0 mA
-5.0 V	0 mA
Physical	
Space Required	1 slot
Weight	2 lbs (.9 kg)

Specification	AS-B984-100/101
Mode of Operation	True high
Working Voltage	20 ... 28 Vdc
Response Time	
Inputs	100 µsec max (no filtering)
Outputs	1 msec max.
Input	
Number of Inputs	16
Number of Groups	1
Source Resistance	1000 Ω
ON Level (<1M Source Impedence)	19.2 Vdc
OFF Level (0 Source Impedence)	6 Vdc
ON Condition Threshold	18 Vdc
Input Wetting Current	6 mA minimum at 24 Vdc
Outputs	
Number of Outputs	8
Number of Groups	1
Min. ON State Output Voltage	19.2 Vdc
ON Current	Max. 1 A per channel Max. 8 A per module
Max. OFF State Leakage	1 mA
Min. Load Current	100 mA
Diagnostic Information	Open Load, Short to Ground or Supply, Current limit, Over temperature
Power Required	
+5 Vdc	0 mA
+4.3 Vdc	0 mA
-5 Vdc	0 mA
External Power Required	CPU 20 ... 30 Vdc, 2A (Excluding field load current) Output 20 ... 30 Vdc, 10A
Dimensions	
Space Required	1 slot
Weight	2 lbs (0.9 kg)
Terminal Connector	Included

AS-B984-100 Terminal Numbering and Wire Connections

Pin #	Signal	Connector no.
1	Own ground	1
2	IN 1	1
3	IN 2	1
4	IN 3	1
5	IN 4	1
6	IN 5	1
7	IN 6	1
8	IN 7	1
9	IN 8	1
10	IN 9	1
11	IN 10	1
12	IN 11	1
13	IN 12	1
14	IN 13	1
15	IN 14	1
16	IN 15	1
17	IN 16	1
18	Own ground	1
19	Own ground	2
20	Module supply 24VDC	2
21	Module supply 24VDC	2
22	Common	2
23	Common	2
24	OUT 1	2
25	OUT 2	2
26	OUT 3	2
27	OUT 4	2
28	OUT 5	2
29	OUT 6	2
30	OUT 7	2
31	OUT 8	2
32	Output supply 24VDC	2
33	Output supply 24VDC	2
34	Output supply return	2
35	Output supply return	2
36	Own ground	2

MAX WIRE SIZE IS ONE 14 AWG WIRE; TWO 18 PIN CONNECTORS

AS-B984-100 Mechanical Keying for Housings

TOP

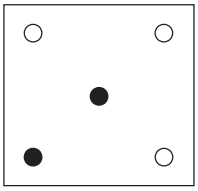

BOTTOM

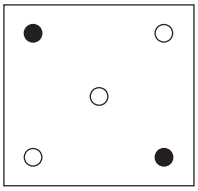

(When facing housing, place pins in holes shown by black circles.)

B984 Discrete High Speed Logic Solver Module

The Modicon B984-100 Discrete High Speed Logic Solver offers the power of a 984 PLC with the response of an intelligent I/O module. With a total system throughput of less than one millisecond, the module provides the capability to control high speed applications not possible with conventional PLCs.

The full 984 basic instruction set makes the module compatible with existing 984 application and programming software, and 4K user logic plus 2K registers provide ample space for application programs.

The B984-100 is fully compatible with the rest of the 984 Family. It services its own dedicated I/O and communicates with the host PLC via the I/O bus. The B984 module and the host PLC pass four or eight 16-bit registers bi-directionally each time the host PLC scans its logic. A built-in Modbus port on the B984 allows connection to programmers, operator interfaces, local area networks, and host computers.

Inputs on the B984 have programmable filtering to allow for quick response and maximum system reliability. Outputs provide fault diagnostic information which is annunciated in the B984 and is available to the host PLC.

Multiple B984 modules may be used in any control system using 800-Series I/O. They can be inserted in any slot, and are limited only by the I/O bits available in the system.

*AS-B984-101 does not support open load detection.

Housings

800-Series Housings are used to hold the PLC, Option Processors, Power Supplies, I/O Interfaces, and I/O Modules. The two styles of housing available are Primary and Secondary. The primary housing is the first housing in an I/O drop. All other housings in the I/O drops are secondary housings. Housings are connected via Signal and Power cables.

There are three sizes of housing available: 10 inch (part numbers begin H810), 19 inch (part numbers begin H819) and 27 inch (part numbers begin H827). The 10 inch housing has four module slots, the 19 inch housings have seven module slots, and the 27 inch housings have eleven module slots.

I/O slots in an H810, H819, or H827 require a field wire terminal connector where wiring to the field sensing/switching devices is made. Once wired, the terminal blocks remain intact while I/O modules are replaced for service. Terminal blocks can be detached without disturbing field wiring if you ever need to replace a housing.

W801 signal cables used to pass OURBUS data between housings in a drop have the following lengths: 2 ft. (0.6 m), 6 ft. (1.8 m), and 12 ft. (3.6 m). Total cable length in a drop must not exceed 20 ft. (6 m). W802 and W808 power cables pass power from a housing with a power supply to a housing without a power supply. W804 cables pass power signals to a housing with an auxiliary power supply. These three cables are also available in the following lengths: 2 ft. (0.6 m), 6 ft. (1.8 m), and 12 ft. (3.6 m). For more information on cables, see Cabling section, page 2-86.

Primary Housings

In a local I/O drop, you can choose either the H810-208, H810-209, H819-209, or H827-209.

The 984-38x and 48x may use the H810-208 (10 inch) housing. The PLC occupies the first (left-most) slot, with the other three slots left for I/O modules. The H810-208 cannot be connected to secondary housings. The 984-38x, 48x, and 68x series PLCs may use either the H810-209 (10 inch), the H819-209 (19 inch) or the H827-209 (27 inch) PLC housings. The PLC must occupy the first (left-most) slot. Option processors (68x, 78x only) or local I/O modules may occupy any other available slots in the housing. Additional local I/O housings connect to the PLC housings through Signal and Power cables. These cables plug into connectors located at the lower left of the Primary housing.

In a remote I/O drop, the primary housing is the first housing and contains the remote I/O interface. You can choose either the H810-208, H819-103 and H827-103 housings, or H810-209, H819-209 and H827-209 primary housings.

H819-209, H827-209, and H810-209 Primary Housings

The H819-209, H827-209, and H810-209 housings are primary housings for slot-mount PLCs and remote 800 Series I/O drops. The H819 contains seven slots that house a slot mount PLC or a P890/P892 Remote I/O Interface, and up to six I/O modules. The H827 contains 11 slots that house a slot-mount PLC or a P890/P892 Remote I/O Interface and up to 10 I/O modules.

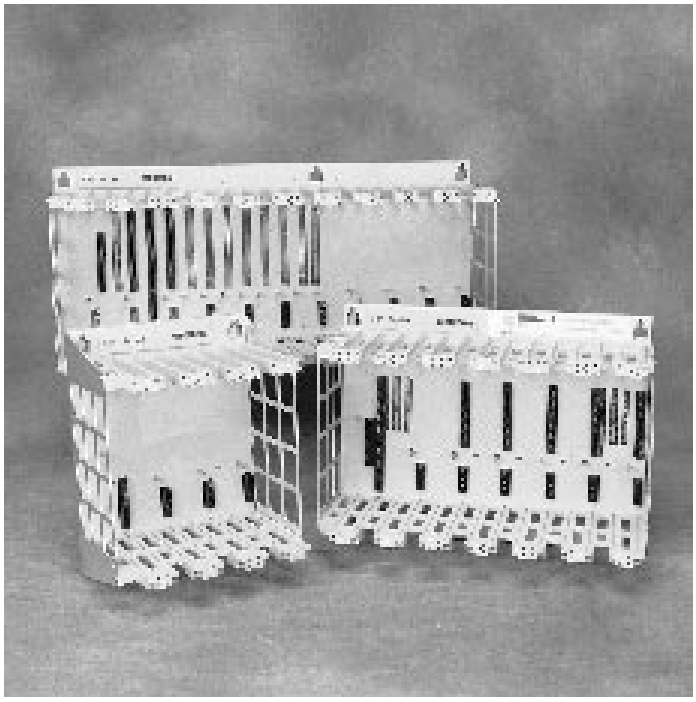

The H810 contains 4 slots that house a slot mount PLC or a P890/P892 remote I/O interface, and up to 3 I/O modules. The H810 supports 685, 785 controllers and option modules.

The H810, H819 and H827 may be mounted on a wall or inside a protective NEMA cabinet. The H819 may also be mounted in a 19 inch standard rack; special mounting flanges are provided for a rack-mount installation.

The H8xx-209 housings are designed so that all control, power, and/or drop interface devices must be located in slot one.

H819-103 and H827-103 Primary Housings

The H819-103 and H827-103 housings are primary housings for remote 800-Series I/O drops. The H819 contains seven slots that house an I/O power supply, an RIO interface device, and up to four I/O modules. The H827 contains eleven slots that house an I/O power supply, an RIO interface device, and up to eight I/O modules.

Both the H819 and H827 may be mounted on a wall or inside a protective NEMA cabinet. The H819 may also be mounted in a 19 inch standard rack; special mounting flanges are provided for a rack mount installation.

The first 1.5 slots contain a P802 or P810 primary power supply. The next 1.5 slots contain either a J890 or J892 RIO Interface.

The first (left-most) slot in the housing contains the 984-38x/48x or P89x. The remaining three slots are for I/O modules.

800 Series Housing Technical Specifications

Description	
AS-H819-209	Primary Housing, 19"
AS-H827-209	Primary Housing, 27"
AS-H819-103	Primary Housing, 19"
AS-H827-103	Primary Housing, 27"
AS-H819-100	Secondary Housing, 19"
AS-H827-100	Secondary Housing, 27"
AS-H810-208	Primary Housing, 10" w/OURBUS only
AS-H810-209	Primary, 10" w/System Bus and OURBUS for 685, 785 controllers
AS-H810-100	Secondary, 10" w/OURBUS only
Maximum Available I/O Slots	
AS-H819-209	6
AS-H827-209	10
AS-H819-103	4
AS-H827-103	8
AS-H819-100	7
AS-H827-100	11
AS-H810-xxx	3
Earth Connection	Earth ground screw on lower edge of subrack
Environmental	
Operating Temperature	0 ... 60°C
Relative Humidity	0 ... 95% (non-condensing)
Shock Resistance	10 G for 10 ms
Physical	
Space Requirement (W x H x D)	
AS-H810 ... xxx	10.25 x 13.5 x 8.9 in (261 x 343 x 255 mm)
AS-H819 ... xxx	17.5 x 13.5 x 8.9 in (444 x 343 x 225 mm)
AS-H827 ... xxx	27.1 x 13.5 x 8.9 in (688 x 343 x 225 mm)
Weight	
AS-H810 ... xxx	10 lbs (4.6 kg)
AS-H819 ... xxx	15 lbs (6.8 kg)
AS-H827 ... xxx	20 lbs (9.1 kg)

H810-208 Primary Housing

The H810-208 is a primary subrack for local 984-38x and 48x systems, or remote I/O drops using P89x interfaces. This rack is used stand-alone and cannot be connected to secondary subracks.

The H810-208 is designed to be mounted on a wall or in a standard NEMA enclosure.

Secondary Housings

All housings in a local or remote I/O drop, except the primary housing, must be secondary housings. Incoming power and signal cables connect on the top of the housing. Outgoing power and signal cables connect on the bottom. Secondary housings available are the H810-100, H819-100 and H827-100 secondary housings.

H810-100, H819-100 and H827-100 Secondary Housings

The H810-100, H819-100 and H827-100 housings are secondary housings for local or remote 800 Series I/O drops. The H819 contains 7 slots that may house I/O modules. The H827 contains 11 slots that may house I/O modules. The H810 contains 4 slots that may house I/O modules. If auxiliary I/O power is required, the power supply must be located in the first slot.

The H810, H819 and the H827 may be mounted on a wall or inside a protective NEMA cabinet. The H819 may also be mounted in a 19 inch standard rack; special mounting flanges are provided for a rack mount installation.

Because they are used only as secondary housings, the H810-100, H819-100 and H827-100 housings must never contain an RIO interface device.

800-Series I/O Cabling

Two cables, a signal and a power cable, are required to interconnect the primary housing and the secondary housing(s) in an 800 I/O drop. The signal cable, in effect, extends the OURBUS to the secondary housing(s) and the power cable provides power to the modules within the secondary housing(s).

The total distance between the PLC housing and the farthest secondary housing must not exceed twenty feet. Any combination of cable lengths is allowed, as long as the twenty foot limitation is observed.

When an auxiliary power supply is added to a secondary housing, the power cable entering that housing must be a W804 power cable. This cable prevents the auxiliary or booster power supply from interfering with the main power supply in the PLC or another auxiliary power supply.

The following figure shows an auxiliary power supply added to a secondary housing and the corresponding cabling.

When a 984X controller is used with local I/O, a special cable, W929, connects the controller to the first housing. This housing must be a secondary-type housing, H8xx-100, and must contain an auxiliary power supply.

The following table shows the available cables. The “xxx” at the end of the part numbers should be replaced with appropriate numbers from the right side of the table when ordering cables.

I/O Cable Configurations w/H8xx-209 Primary Housing

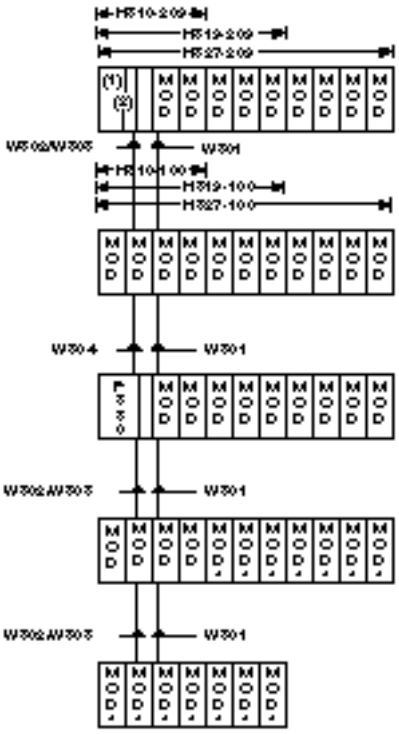

(1) 984-38x/48x, P89x occupy slot 1, slot 2 available for I/O module.
(2) 984-68x/78x occupy slot 1 and 2.
* Maximum 32 modules per drop (Maximum 2 racks for 984-38x/48x).

800-Series I/O Cables

Model	Description	Available Lengths 1.5 ft	5 ft	6 ft	12 ft	20 ft
AS-W801-xxx	I/O signal cable between racks	-002	N/A	-006	-012	N/A
AS-W808-xxx	I/O power cable to added rack w/o power supply	-002	-005	N/A	N/A	N/A
AS-W802-xxx	I/O power cable to added rack w/o power supply	N/A	N/A	N/A	-012	N/A
AS-W804-xxx	I/O power cable to added rack with power supply	-002	-005	N/A	-012	N/A
AS-W929-xxx	Local I/O cable for 984X	N/A	N/A	-006	-012	-020

I/O Cable Configurations
w/H8xx-103 Primary Housing

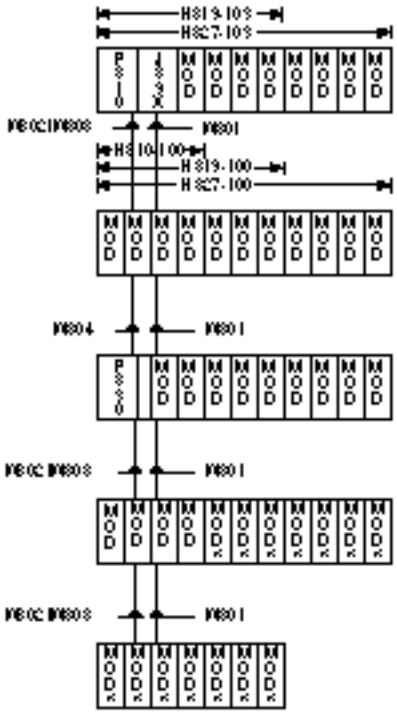

* Maximum 32 modules per drop.

800-Series I/O Power Supplies

A local or remote I/O system requires a power supply for the I/O modules and for communications support between the modules and the PLC. In some cases, the power supply is built into the PLC or into the remote I/O interface where, in other cases, the power supply and the I/O interface are separate components. Certain applications will require an auxiliary power supply should the I/O requirements exceed the capacity of the primary supply. Below is a list of 800-Series I/O power supplies, both integrated and auxiliary. To determine the power requirements of your system, you must add together the individual power requirements of the I/O and option modules within your system.

Model	Description	Voltage	I/O Power Available(mA) Slots	+5.0V	+4.3V	-5.0V
AS-P802-001	Remote Primary & Secondary	24 Vdc	1.5	2500	10100	500
AS-P810-000	Remote Primary & Secondary	115/230 Vac	1.5	5000	5000	300
PC-X984-68x/78x	Internal Supply for Local I/O	115/230 Vac, 24 Vdc	1.5	8000	6000	500[1]
PC-X984-38x/48x	Internal Supply for Local I/O	115/230 Vac, 24 Vdc	1	3000	3000	250[2]
AS-P890/892-000	Internal Supply for Remote I/O	115/230 Vac, 24 Vdc	1	3000	3000	250[2]
AS-P830-000	Secondary	115/230 Vac, 24 Vdc	1.5	5000	6000	500[3]
AS-P840-000	Remote Primary/Secondary	115/230 Vac	1.5	5000[4]	10000[4]	500

[1] Total max. = 8,000 mA
[2] Total max. = 3,000 mA
[3] Total max. = 6,000 mA
[4] Total max. sum of (+4.3V and +5V) @ 55°C = 15000 mA
@ 60°C = 12000 mA

Note: Model PC-X984 is for E984 controllers.

P802 I/O Power Supply

A P802 Power Supply may serve as either a primary or auxiliary power unit in an 800-Series I/O drop. Its input voltage is 24 Vdc.

The P802 is 1.5 slots wide. When used in a primary housing, it consumes the first 1.5 slots and is followed immediately by a remote I/O interface. When used as an auxiliary power supply, it consumes the first two slots in a secondary housing.

P802 Terminal Numbering and Input Connections

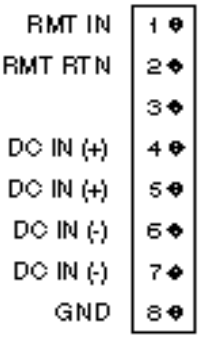

AS-P802-001 I/O Power Supply Technical Specifications

Power Supply	
Input Voltage	24 Vdc
Output Voltage	
+5 Vdc	2.5 A
+4.3 Vdc	10.1 A
-5 Vdc	0.5 A
Environmental	
Operating Temperature	0 ... 60°C
Relative Humidity	0 ... 95% (non-condensing)
Shock Resistance	10 G (11 ms)
Physical	
Space Requirements	1.5 slots in an H8xx-103 Primary housing, or 2 slots in an H8xx-100 Secondary housing
Weight	7 lbs (3.2 kg)

P810 I/O Power Supply

A P810 Power Supply may serve as either a primary or auxiliary power unit in a 800-Series I/O drop. Its input voltage (115 Vac or 230 Vac) is determined by the way the input terminal block is wired.

The P810 is 1.5 slots wide. When used in a primary housing, it consumes the first 1.5 slots, and is followed immediately by a remote I/O interface. When used as an auxiliary power supply, it consumes the first two slots in a secondary housing.

P810 Terminal Numbering and Input Connections

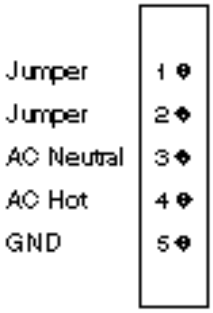

115 Vac Operation:
Jumper installed between terminals 1 & 2

230 Vac Operation:
No connection between terminals 1 & 2

AS-P810-000 I/O Power Supply Technical Specifications

Power Supply	
Input Voltage	115/230 Vac
Output Voltage	
+5 Vdc	5.0 A
+4.3 Vdc	5.0 A
-5 Vdc	0.3 A
Environmental	
Operating Temperature	0 ... 60°C
Relative Humidity	0 ... 95% (non-condensing)
Shock Resistance	10 G (11 ms)
Physical	
Space Requirements	1.5 slots in an H8xx-103 Primary housing, or 2 slots in an H8xx-100 Secondary housing
Weight	7 lbs (3.2 kg)

P830 I/O Power Supply

A P830 Power Supply serves as an auxiliary power unit in an 800-Series I/O drop when the power limitations of the primary power supply are exceeded.

The P830 is 1.5 slots wide. It must be installed in the two left-most slots of a secondary housing.

P830 Terminal Numbering and Input Connections

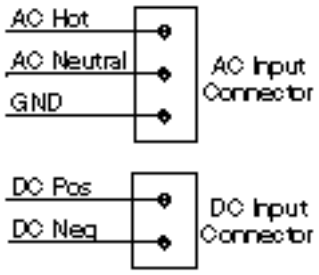

AS-P830-000

I/O Power Supply Technical Specifications

Power Supply	
Input Voltage	115/230 Vac 24 Vdc
Output Voltage	
+5 Vdc	5000 mA
+4.3 Vdc	6000 mA
-5 Vdc	500 mA
	Total current must not exceed 6000 mA
Environmental	
Operating Temperature	0 ... 60°C
Relative Humidity	0 ... 95% (non-condensing)
Shock Resistance	10 G (11 ms)
Physical	
Space Requirements	2 slots in a secondary subrack
Weight	3 lbs (1.4 kg)

P840 I/O Power Supply

A P840 Power Supply may serve as either a primary or auxiliary power unit in a 800-Series I/O drop. Its input voltage (115 Vac or 230 Vac) is determined by the way you wire the input terminal block.

The P840 is 1.5 slots wide. When used in a primary housing, it consumes the first 1.5 slots, and is followed immediately by a remote I/O interface. When used as an auxiliary power supply, it consumes the first two slots in a secondary housing.

P840 Terminal Numbering and Input Connections

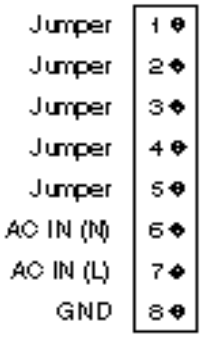

AS-P840-000

I/O Power Supply Technical Specifications

Power Supply	
Input Voltage	115/230 Vac
Output Voltage	
+5 Vdc	5.0 A[1]
+4.3 Vdc	10.0 A[1]
-5 Vdc	0.5 A
Environmental	
Operating Temperature	0 ... 60°C
Relative Humidity	0 ... 95% (non-condensing)
Shock Resistance	15 G (11 ms)
Physical	
Space Requirements	1.5 slots in an H8xx-103 Primary housing, or 2 slots in an H8xx-100 Secondary housing
Weight	7 lbs (3.2 kg)
[1] Total max. sum of (+4.3V and +5V)	@ 55° C = 15000 mA @ 60° C = 12000 mA

Remote I/O Drop Interfaces

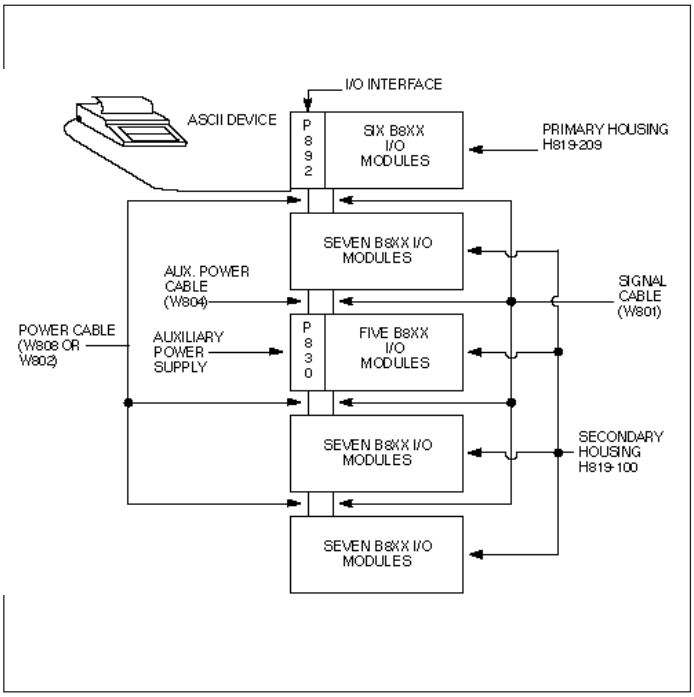

At each remote drop is a remote I/O (RIO) interface device that communicates over the coaxial cable with the RIO processor in the PLC. The RIO interface contains a set of switches that you use to set the address for the drop. There are various kinds of RIO interfaces you can use, depending on the I/O Series in the drop and the type of RIO processor in the PLC. According to your application requirements, you may select RIO interfaces that provide the drop with ASCII device support. I/O interfaces are available with a variety of features (See table below).

The remote I/O processor can contain an integrated power supply, otherwise, a power supply has to be mounted in the primary housing. An additional power supply can be mounted in any secondary housing if required.

	Interfaces						
Feature	**J890**	**J892**	**P890**	**P892**	**D908**	**J290**	**J291**
Remote I/O Processing	yes	yes	yes	yes	no	yes	yes
ASCII Communication	no	yes	no	yes	no	yes	no
Integrated Power Supply	no	no	yes	yes	no	no	no
Distributed Control	no	no	no	no	yes	no	no
Dual Cable Option	yes	yes	no	no	yes	yes	no

J890/J892 RIO Interfaces

A J890 or J892 can be used as the remote I/O interface at each remote drop of 800-Series I/O when the 984 uses the S908 RIO communications protocol. This module takes up 1.5 slots and is positioned in slots 2 and 3 just beside the I/O power supply in the primary housing.

A J890 supports a remote drop of 800-Series I/O with no ASCII communication requirements. A J892 supports a remote drop of 800 Series I/O which also requires ASCII communications capability. The J892 supports ASCII Read and Write functions as well as RIO processing. Two half-duplex ASCII ports on the J892 allow you to transfer ASCII characters to and from terminals, printers, and other peripheral devices.

The J890 and J892 are available with single or dual I/O connectors. If you are running single or dual cable topologies from the 984 PLC, your interface module needs only one I/O connector. If you are running a redundant cable topology to your RIO drops, your interface module requires the dual cable version.

J890/J892 Technical Specifications

Description	
AS-J890-101	Single Cable RIO Interface
AS-J890-102	Redundant Cable RIO Interface
AS-J892-101	Single Cable RIO Interface w/ ASCII
AS-J892-102	Redundant Cable RIO Interface w/ ASCII
Communication	
Coaxial Cable Connectors	1 or 2
J892 ASCII Device Support	2
RIO Communication Protocol	S908 (HDLC)
Environmental	
Operating Temperature	0 ... 60°C
Relative Humidity	0 ... 95% (non-condensing)
Shock Resistance	10 G (11 ms)
Physical	
Space Requirements	1.5 slots in H8xx-103 housing (Slots 2 & 3)
Weight	5 lbs (2.25 kg)

P890/P892 RIO Interfaces

A P890 or P892 can be used as the remote I/O interface when the PLC uses the S908 RIO communications protocol. The P890 and P892 include an integrated 3 A power supply for providing power to adjacent I/O modules. The P890/P892 modules reside in slot 1 of the primary housing at each RIO drop, freeing slots 2 and 3 for additional I/O modules.

Use the P890 RIO Interface to support a remote drop of 800-Series I/O with no ASCII requirements at the drop. Use the P892 RIO Interface to support a remote drop of 800-Series I/O with ASCII communications. The P892 supports ASCII Read and Write, RIO processing, and power supply functions. Two half-duplex ASCII ports allow you to perform ASCII functions to and from appropriate terminals, printers, and other peripheral devices.

The P890 and P892 Interfaces have one RIO cable connector port. They support single and dual cable topologies, but not redundant cable topologies.

P890/P892 Technical Specifications

Description	
AS-P890-000	Single Cable RIO Interface
AS-P892-000	Single Cable RIO Interface w/ ASCII
Communication	
Coaxial Cable Connectors	1
P892 ASCII Device Support	2 ports
RIO Communication Protocol	S908 (HDLC)
Power Supply	
Input Voltage	115/230 Vac 24 Vdc
Output Voltage	
+5 Vdc	3 A (max.)
+4.3 Vdc	3 A (max.)
-5 Vdc	0.25 A
Total	3 A
Environmental	
Operating Temperature	0 ... 60°C
Relative Humidity	0 ... 95% (non-condensing)
Shock Resistance	10 G (11 ms)
Physical	
Space Requirements	1 Slot in H8xx-209 or H810-208 housing
Weight	5 lbs (2.25 kg)

Remote I/O with ASCII Communication

ASCII Device Programming

Two three-node function blocks, READ and WRIT, are provided in the executive PROM of all 984 PLCs with RIO capabilities. The function blocks are implemented in user logic to handle ASCII message passing between the remote devices and the PLC memory.

ASCII strings may be read by a 984 controller from an ASCII device (such as a keyboard, a bar code reader, or a push button panel) at a remote drop via a READ function; the controller may send messages to an ASCII display device (such as a CRT or a printer) via a WRIT function.

An ASCII Editor in your panel software allows you to create, edit, and manage a library of ASCII messages to be read or written over the RIO communication link. These ASCII messages reside in a table that occupies space in user logic memory.

The ASCII editor offers many features, including the following tools:

- Displaying and modifying READ and WRIT blocks
- Displaying and making limited changes to the current values of references
- Initializing an area of PLC memory for message storage
- Searching message files for specific character patterns.

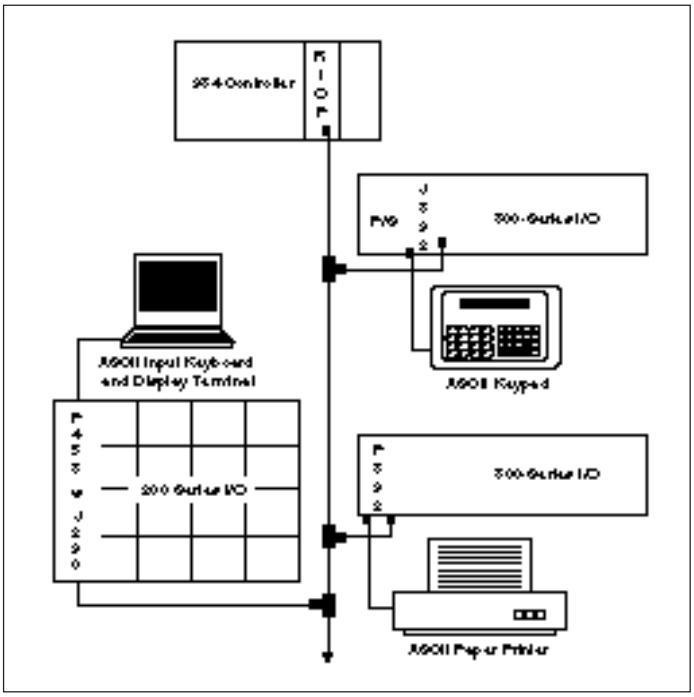

A 984 PLC that communicates with remote I/O allows you to connect ASCII data entry and data display devices at as many as 16 drop sites, depending on the PLC. Special types of remote I/O interface devices must be used at the drops when ASCII devices are used.

RIO Interfaces for ASCII Communications

The J812 and J892 RIO Interfaces (for 800 Series I/O) and the P453 RIO Interface (for 200 and 500 Series I/O) have 25-pin female ASCII ports; the P892 RIO Interface (for 800 Series I/O) has 9-pin female ASCII ports:

25-Pin Male RIO ASCII Port J812, J892, P453		9-Pin Male RIO ASCII Port P892	
Shield	1	Shield	1
TX	2	RX	2
RX	3	TX	3
RTS	4	DTR	4
CTS	5	Ground	5
DSR	6	DSR	6
Ground	7	RTS	7
DTR	20	CTS	8

Each of these RIO Interface Devices can support two ASCII devices. As many as 32 ASCII devices can be controlled from a 984 PLC, two per drop at up to 16 drops.

Configuring A Local I/O System

Local I/O configurations are where the PLC and I/O modules communicate directly via the backplane and through cables that extend the I/O bus (OURBUS).

The 984 PLCs that support local configurations include all models except the 984A and 984B. A local I/O system consists of the PLC, I/O and associated housings, power and signal cables, and, where required, auxiliary power supplies.

Local I/O must be addressed as Drop #1 in the 984 Traffic Cop.

An auxiliary power supply is required when total power consumption by all modules in the local drop exceeds the capacity of the primary supply. Auxiliary power supplies provide all I/O power to modules beyond its location and provide no power to modules located before it.

The table below provides you with maximum local drop size figures for the PLCs that support local I/O. Local drops cannot exceed the figures shown.

The following tools are designed to assist you in the configuration of 984 local I/O systems. Refer to the configuration pages that follow associated with the controller CPU you have chosen.

1. Local 984-381/385 and 984-480/485 systems in H810, H819 and H827-209 housings.
2. Local 984-381/385 and 984-480/485 in H810-208 four-slot housing.
3. Local 984-685 and 984-785 systems.
4. Local 984X system.

Maximum for Local I/O

Model	Discrete I/O (Any Mix)	Total I/O Bits	Cable Distance	Housings	Modules
PC-E984-381	512	512/512	12 ft	2	21
PC-x984-385	512	512/512	12 ft	2	21
PC-x984-48x	2048	512/512	12 ft	2	21
PC-E984-685	16384	512/1024*	20 ft	5	32
PC-X984-785	65535	512/512	20 ft	5	32
P1-984X-108	2048	512/512	20 ft	5	32
Px-984A-xxx	2048	N/A	N/A	N/A	N/A
Px-984B-xxx	8192/8192	N/A	N/A	N/A	N/A

Note: Each discrete I/O point requires 1 bit of addressing. Each analog point or register word requires 16 bits of addressing.

* Depends on S908 Executive software

CPU

	Modbus Ports	Modbus Plus Ports	Remote I/O	I/O Bits/Drop	Discrete I/O (any mix)	Total I/O Bits In/Out
PC-E984-381	2	0	N/A	512/512	512	512/512
PC-E984-385	1	1	N/A	512/512	512	512/512
PC-E984-385	1	1	N/A	512/512	512	512/512
PC-E984-480	2	0	6 Drops	512/512	2048	3584/3584
PC-K984-485	1	1	6 Drops	512/512	2048	3584/3584
PC-E984-485	1	1	6 Drops	512/512	2048	3584/3584

Select CPU type based on communication, memory, and I/O requirements.

Take care not to exceed Discrete I/O or total system I/O Bits limitations.

HOUSINGS

	Primary	Secondary
10 inch (4 slots)	AS-H810-208 AS-H810-209	N/A AS-H810-100
19 inch (7 slots)	AS-H819-209	AS-H819-100
27 inch (11 slots)	AS-H827-209	AS-H827-100

The first housing in a local I/O system must be primary, the remaining housings, secondary.

CABLES

		1.5 ft.	5.0 ft.	6.0 ft.	8.0 ft.	12.0 ft.
Power						
	W/O Aux. P.S.	AS-W808-002	AS-W808-005	N/A	AS-W808-008	AS-W802-012
	W/Aux. P.S.	AS-W804-002	AS-W804-005	N/A	N/A	AS-W804-012
Signal		AS-W801-002	N/A	AS-W801-005	N/A	AS-W801-012

If secondary housings are used, signal and power cables are required.

Note: Different power cables are used for systems with and without aux. power supplies.
Choose the length required.

POWER SUPPLIES

		Supply Voltage	+5VDC (mA)	+4.3VDC (mA)	–5VDC (mA)	Total Power
Primary	385 480 485	120 VAC 240 VAC 24 VDC	3000	3000	250	3000
Auxiliary	AS-P810-000	120 VAC 240 VAC	5000	5000	300	10300
	AS-P830-000	120 VAC 240 VAC 24 VDC	5000	6000	500	6000

Each CPU listed includes a 3000mA power supply (see table). **Power requirements for housing #1 (primary) must not exceed any of the limitations shown.**

If total system power requirements exceed CPU's internal power supply capability, an auxiliary power supply must be added in slot 1 of the next secondary housing.

To use this configuration sheet:
- ☐ Select the components shown on opposing page, within the guidelines above.
- ☐ The catalog numbers in the shaded boxes comprise your bill of material.
- ☐ Configure any remote I/O drops required (984-480/485).

Rules for Drop Configurations:
- ☐ Drop can be expanded to a maximum of two 19" or 27" housings.

984-381/385/480/485 Configuration (local I/O)

System Number _____

(page)

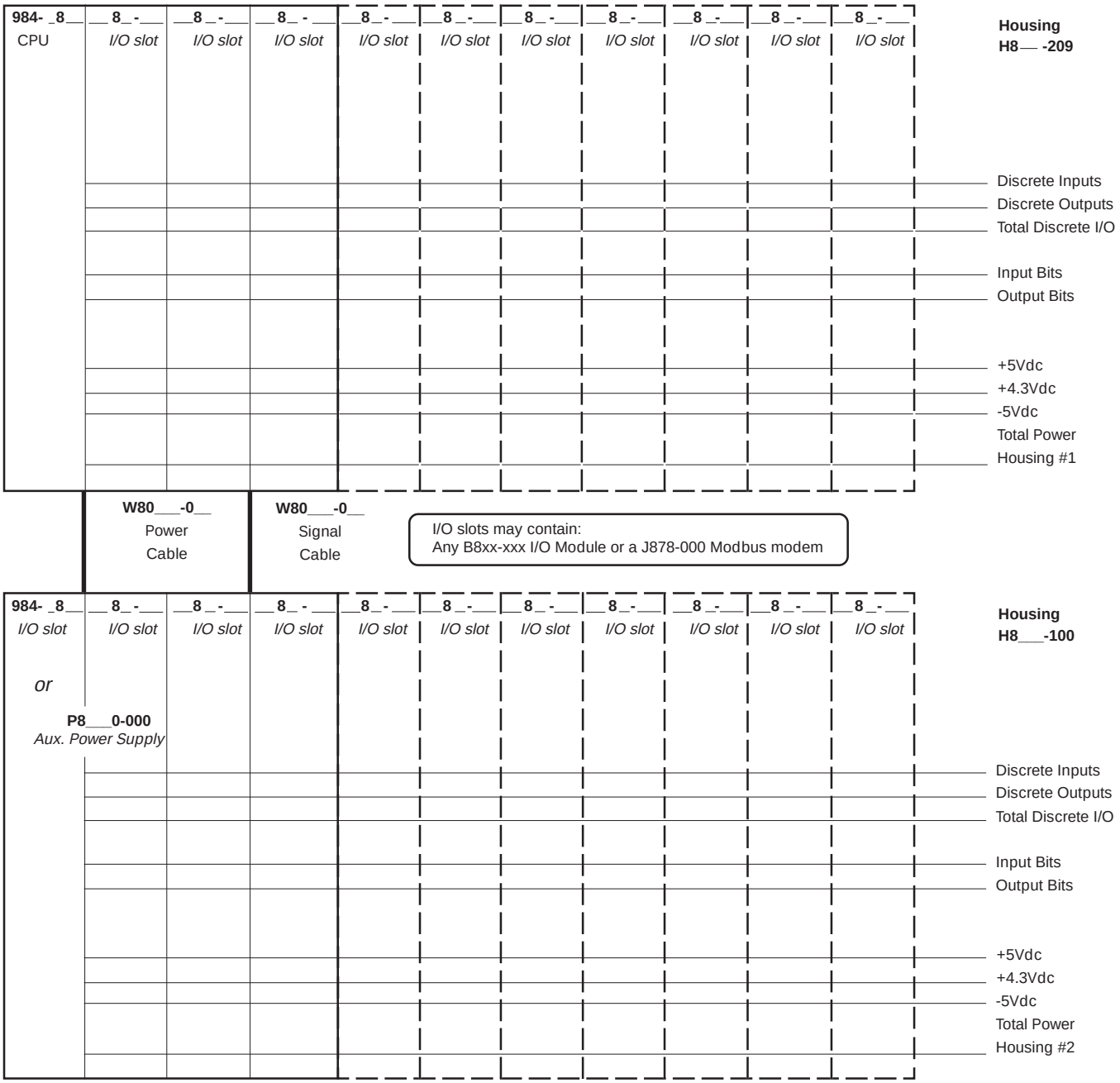

CPU

	Modbus Ports	Modbus Plus Ports	Remote I/O	I/O Bits/Drop	Discrete I/O (any mix)	Total I/O Bits In/Out
PC-E984-381	2	0	N/A	512/512	512	512/512
PC-E984-385	1	1	N/A	512/512	512	512/512
PC-E984-395	1	1	N/A	512/512	512	512/512
PC-E984-480	2	0	6 Drops	512/512	2048	3584/3584
PC-K984-485	1	1	6 Drops	512/512	2048	3584/3584
PC-E984-485	1	1	6 Drops	512/512	2048	3584/3584

Select CPU type based on communication, memory, and I/O requirements.

Make sure not to exceed Discrete I/O or total system I/O Bits limitations.

To use this configuration sheet:

- ☐ Select the components shown on opposing page, within the guidelines above.
- ☐ The catalog numbers in the shaded boxes comprise your bill of material.
- ☐ Configure any remote I/O drops required (984-480/485).

Rules for Drop Configurations:

- ☐ A maximum of one housing can be configured per drop if using the H810-208.

H810-208 Configuration (local I/O)
(381/385/480/485)

System Number _____
(page)

Configuration 1 (Controllers)

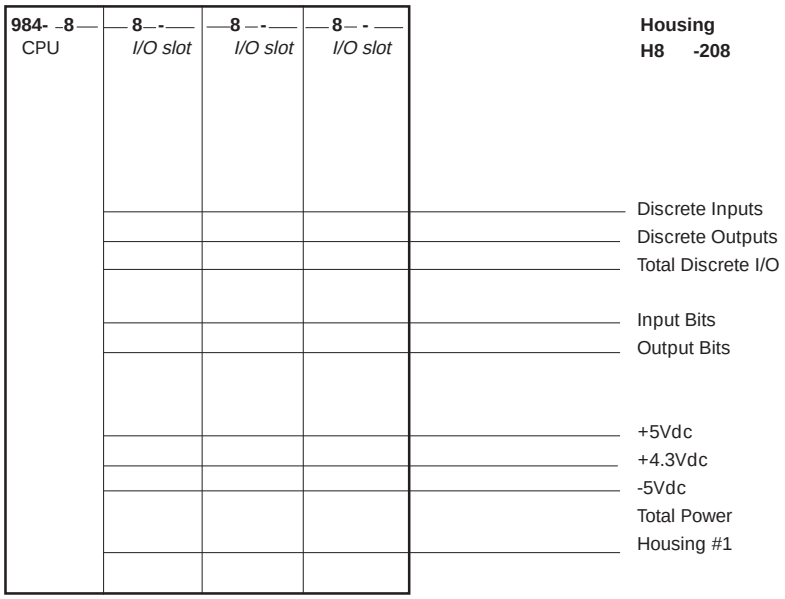

I/O slots may contain:
Any B8xx-xxx I/O Module or a J878-000 Modbus modem

CPU

	Modbus Ports	Modbus Plus Ports	Remote I/O	I/O Bits/Drop**	Discrete I/O (any mix)	Total I/O Bits In/Out
PC-E984-685	2	1	31 drops	512/512	4096	16384/16384
PC-D984-785	2	1	31 drops	512/512	8192/8192	65535
PC-K984-785	2	1	31 drops	512/512	8192/8192	65535
PC-E984-785	2	1	31 drops	512/512	8192/8192	65535

Select CPU type based on communication, memory, and I/O requirements.

***The I/O bits per drop assume the use of a P890/92 or J890/92.*

Take care not to exceed Discrete I/O or total system I/O bits limitations.

HOUSINGS

	Primary	Secondary
10 inch (4 slots)	AS-H810-208 AS-H810-209	N/A AS-H810-100
19 inch (7 slots)	AS-H819-209	AS-H819-100
27 inch (11 slots)	AS-H827-209	AS-H827-100

The first housing in a local I/O system must be primary, the remaining housings, secondary.

CABLES

		1.5 ft.	5.0 ft.	6.0 ft.	8.0 ft.	12.0 ft.
Power						
	W/O Aux. P.S.	AS-W808-002	AS-W808-005	N/A	AS-W808-008	AS-W802-012
	W/Aux. P.S.	AS-W804-002	AS-W804-005	N/A	N/A	AS-W804-012
Signal		AS-W801-002	N/A	AS-W801-005	N/A	AS-W801-012

If secondary housings are used, signal and power cables are required.

Note: Different power cables are used for systems with and without aux. power supplies.
Choose the length required.

POWER SUPPLIES

		Supply Voltage	+5VDC (mA)	+4.3VDC (mA)	-5VDC (mA)	Total Power
Primary	685 785	120 VAC 240 VAC 24 VDC	8000	6000	500	8000
Auxiliary	AS-P810-000	120 VAC 240 VAC	5000	5000	300	10300
	AS-P830-000	120 VAC 240 VAC 24 VDC	5000	6000	500	6000

Each CPU listed includes a 8000mA power supply (see table). **Power requirements for housing #1 (primary) must not exceed any of the limitations shown.**

If total system power requirements exceed CPU's internal power supply capability, an auxiliary power supply must be added in slot 1 of the next secondary housing.

To use this configuration sheets
- ☐ Select the components shown on opposing page, within the guidelines above.
- ☐ The catalog numbers in the shaded boxes comprise your bill of material.
- ☐ Configure any remote I/O drops required.

Rules for Drop Configurations:
- ☐ Maximum allowable I/O configuration is 32 modules, 5 housings.
- ☐ Recommended total length of cabling between first and last housing is 20 feet.
- ☐ Expansion to fifth housing addresses up to 32nd I/O slot when 19" housings are used with prior configuration.

984-685/785 Local Drop Configuration

System Number _____

(page)

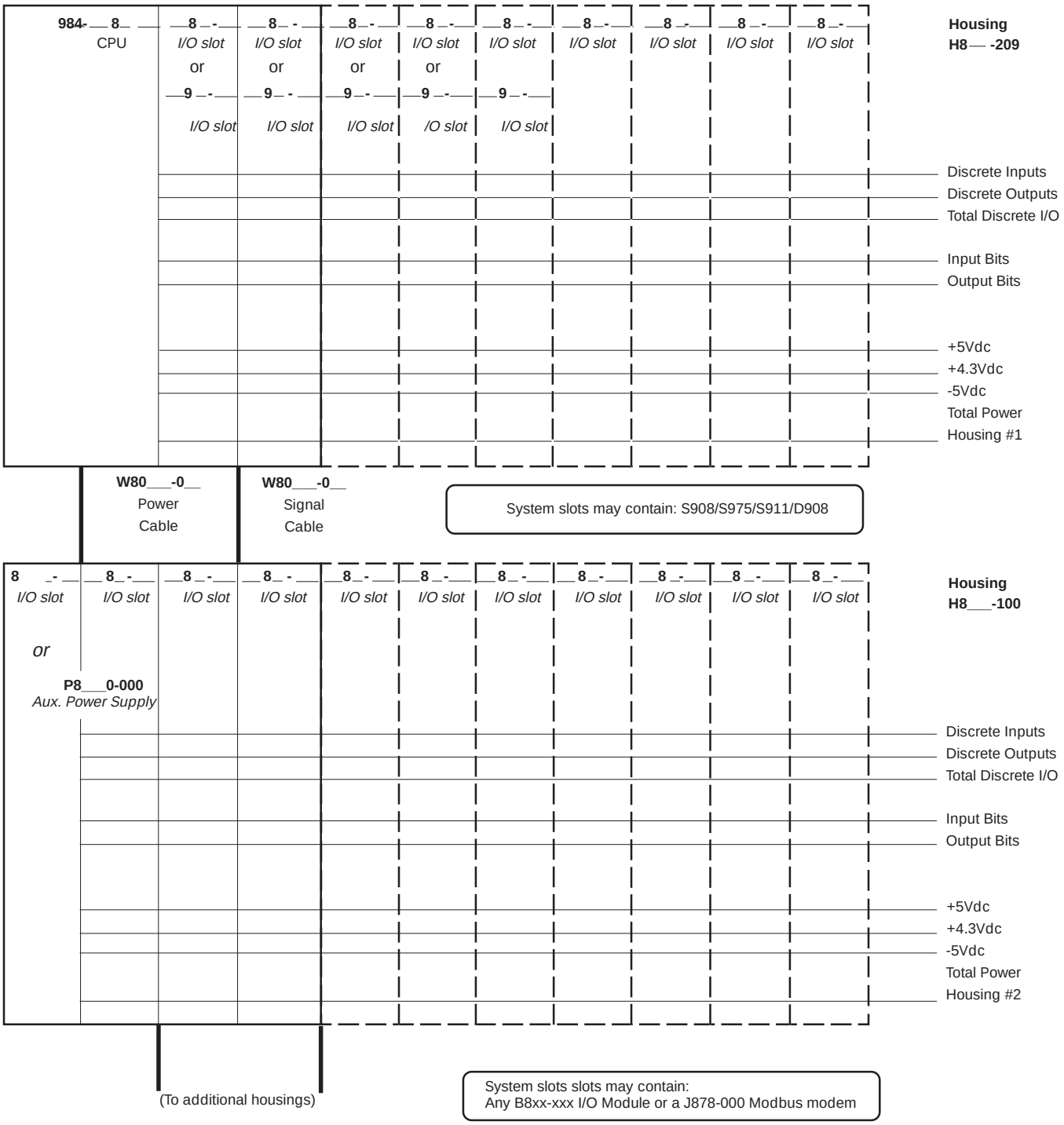

984-685/785 Local Drop Configuration

System Number _____

(page)

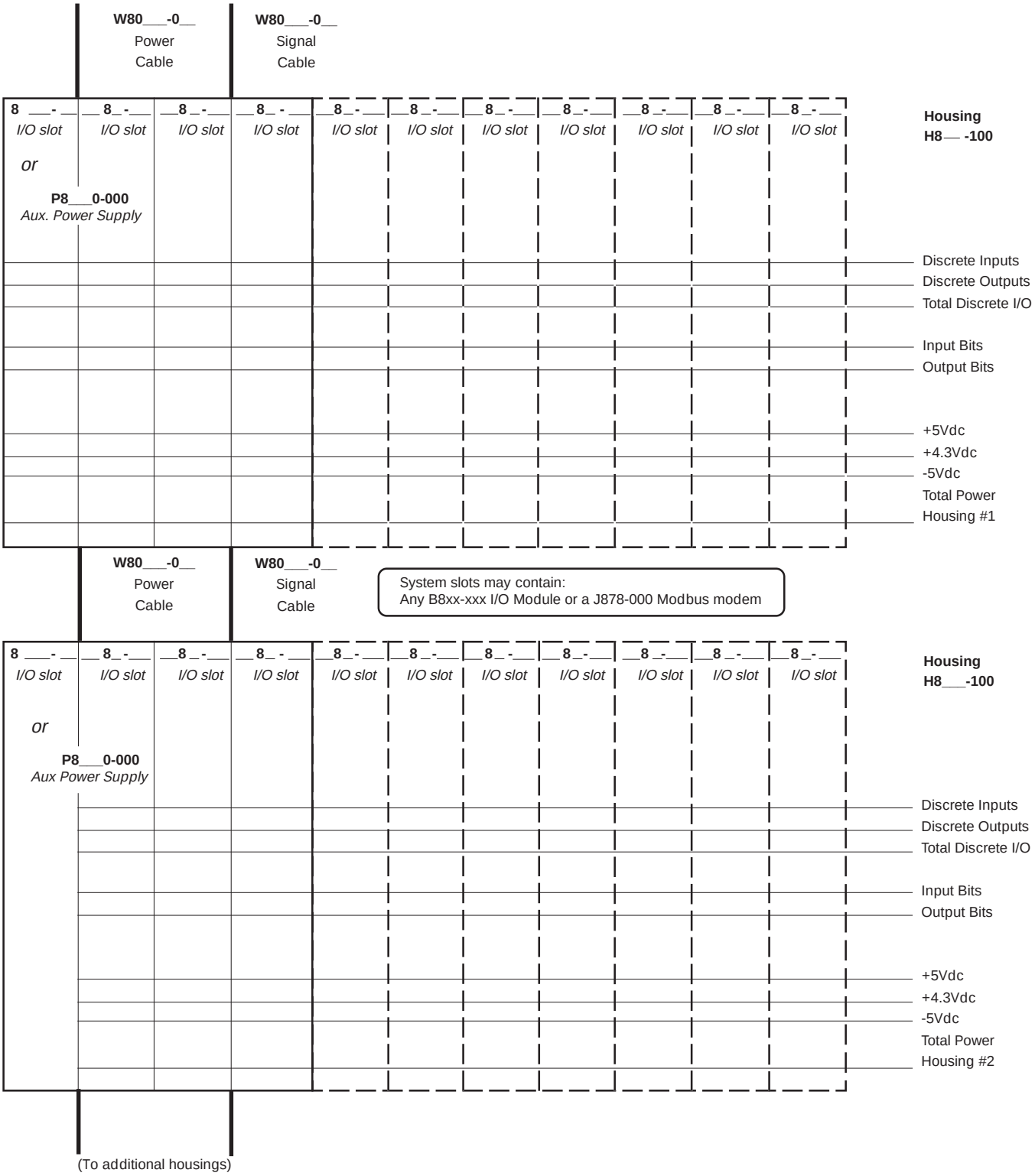

984-685/785 Local Drop Configuration

System Number _____

(page)

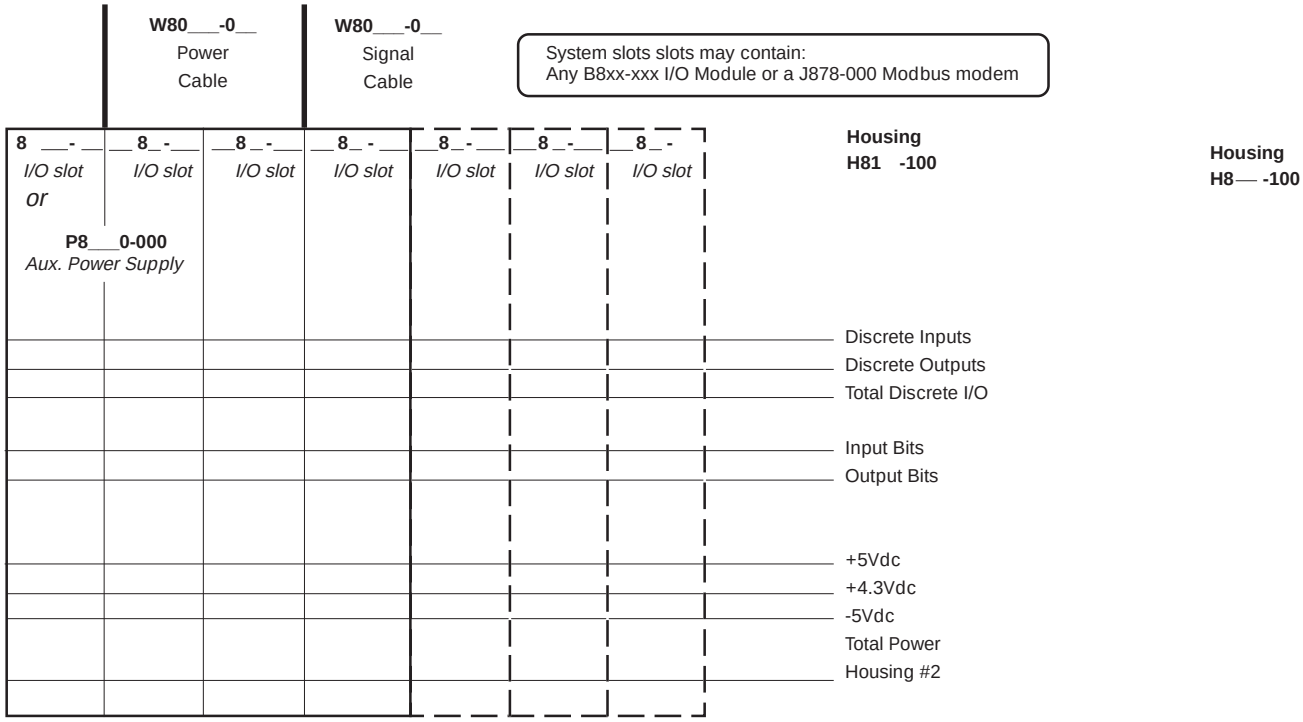

CPU

	Modbus Ports	Modbus Plus Ports	Remote I/O	I/O Bits/Drop**	Discrete I/O per system	Total I/O Bits In/Out
PI-984X-108	2	0	6 drops	512/512	2048	3584/3584

Select CPU type based on communication, memory, and I/O requirements.

***The I/O bits per drop assume the use of a P990/92 or J990/92.*

Take care not to exceed Discrete I/O or total system I/O bits limitations.

HOUSINGS

	Primary	Secondary
10 inch (4 slots)	AS-H810-208 AS-H810-209	N/A AS-H810-100
19 inch (7 slots)	AS-H819-209	AS-H819-100
27 inch (11 slots)	AS-H827-209	AS-H827-100

The first housing in a local I/O system must be primary, the remaining housings, secondary.

CABLES

		1.5 ft.	5.0 ft.	6.0 ft.	8.0 ft.	12.0 ft.
Power						
	W/O Aux. P.S.	AS-W808-002	AS-W808-005	N/A	AS-W808-008	AS-W802-012
	W/Aux. P.S.	AS-W804-002	AS-W804-005	N/A	N/A	AS-W804-012
Signal		AS-W801-002	N/A	AS-W801-005	N/A	AS-W801-012

If secondary housings are used, signal and power cables are required.

Note: Different power cables are used for systems with and without aux. power supplies.
Choose the length required.

POWER SUPPLIES

		Supply Voltage	+5VDC (mA)	+4.3VDC (mA)	-5VDC (mA)	Total Power
Auxiliary	AS-P810-000	120 VAC	5000	5000	300	10300
	AS-P830-000	120 VAC	5000	6000	500	6000

Power requirements for housing #1 (primary) must not exceed any of the limitations shown.

If total system power requirements exceed CPU's internal power supply capability, an auxiliary power supply must be added in slot 1 of the next secondary housing.

To use this configuration sheets
- ☐ Select the components shown on opposing page, within the guidelines above.
- ☐ The catalog numbers in the shaded boxes comprise your bill of material.
- ☐ Configure any remote I/O drops required.

Rules for Drop Configurations
- ☐ Maximum allowable I/O configuration is 32 modules, 5 housings.
- ☐ Recommended total length of cabling between first and last housing is 20 feet.
- ☐ Expansion to fifth housing addresses up to 32nd I/O slot when 19" housings are used with prior configuration.

984X Local Drop Configuration

System Number _____

(page)

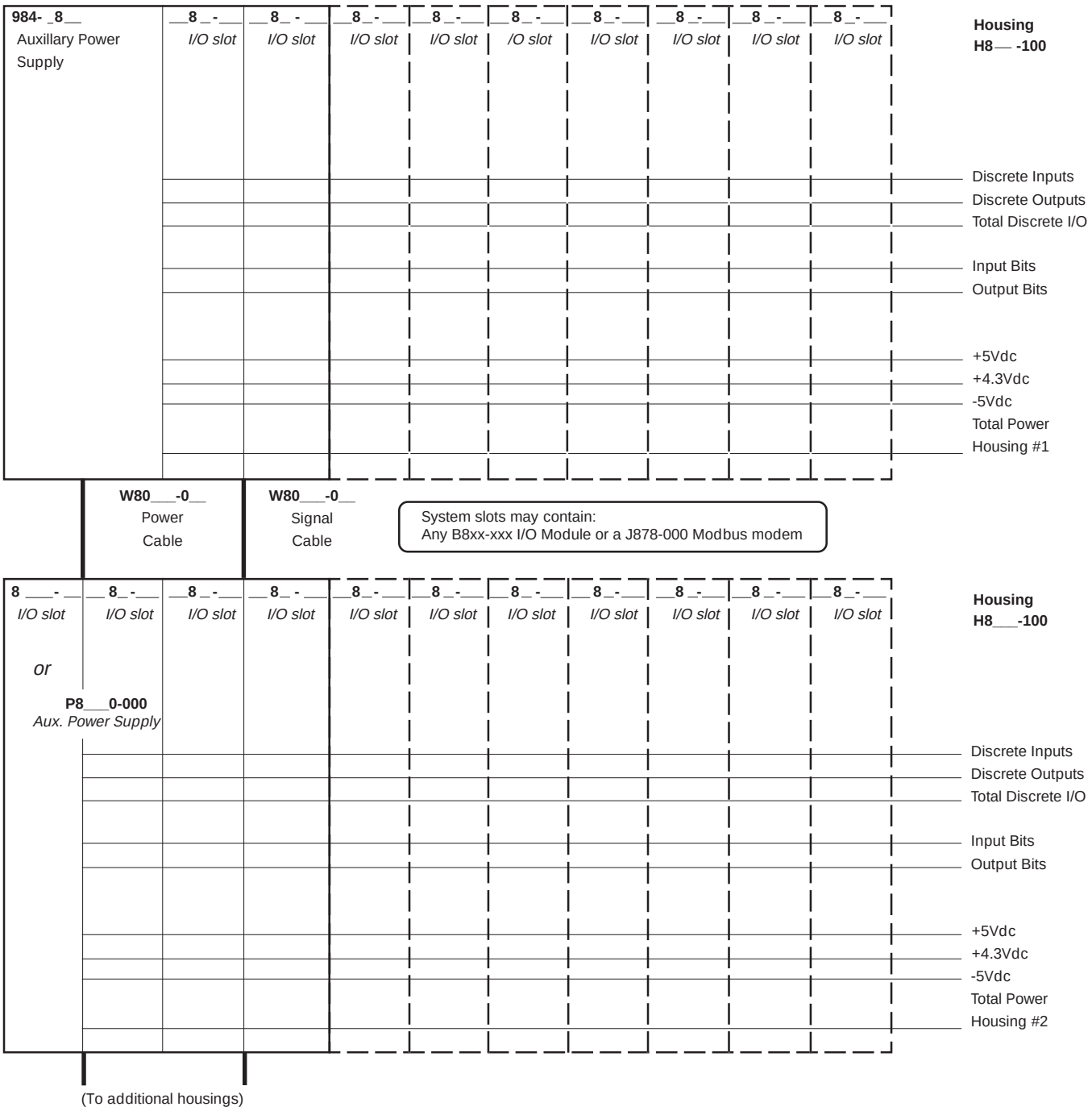

984X Local Drop Configuration

System Number _____

(page)

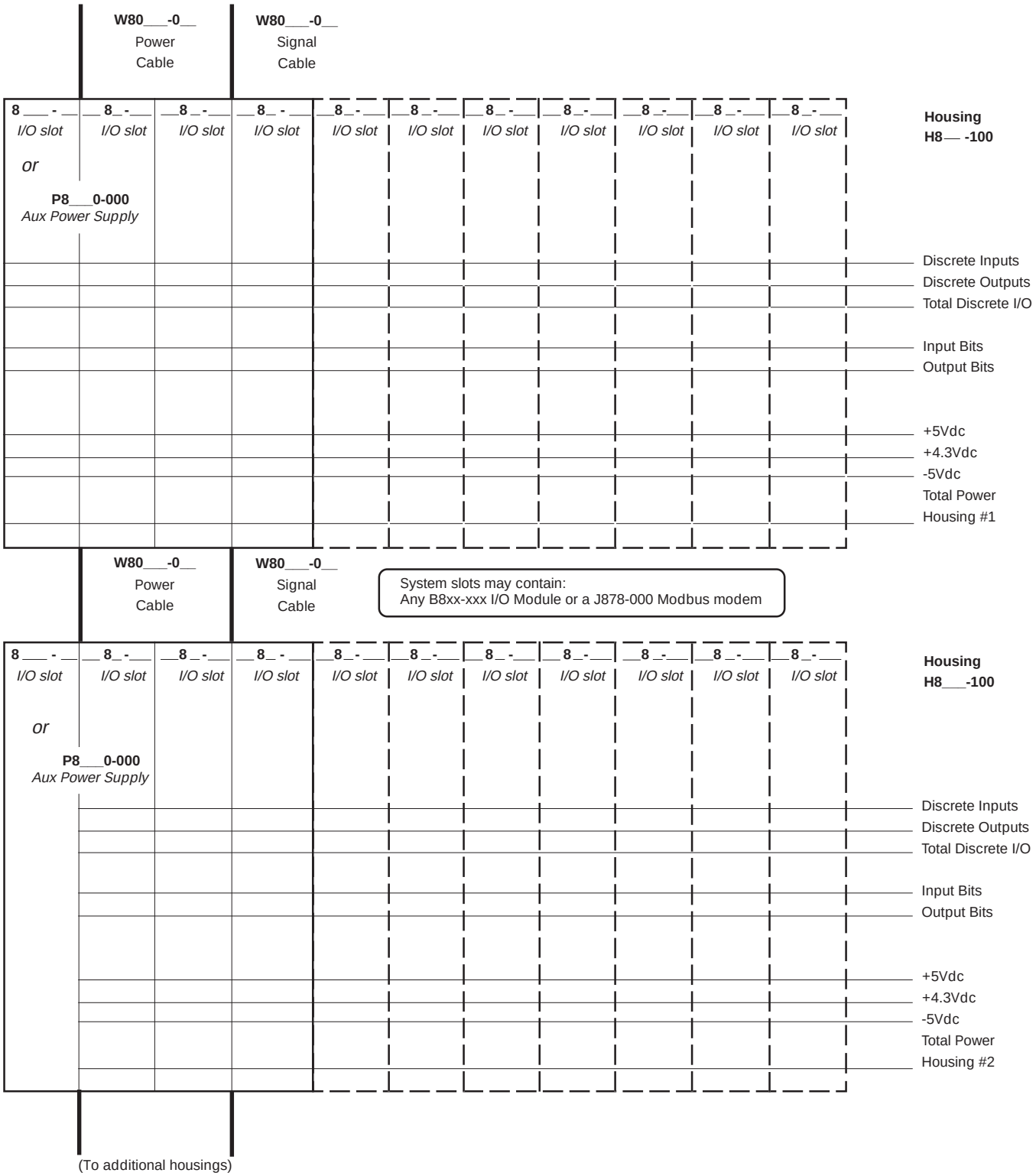

984X Local Drop Configuration

System Number _____

(page)

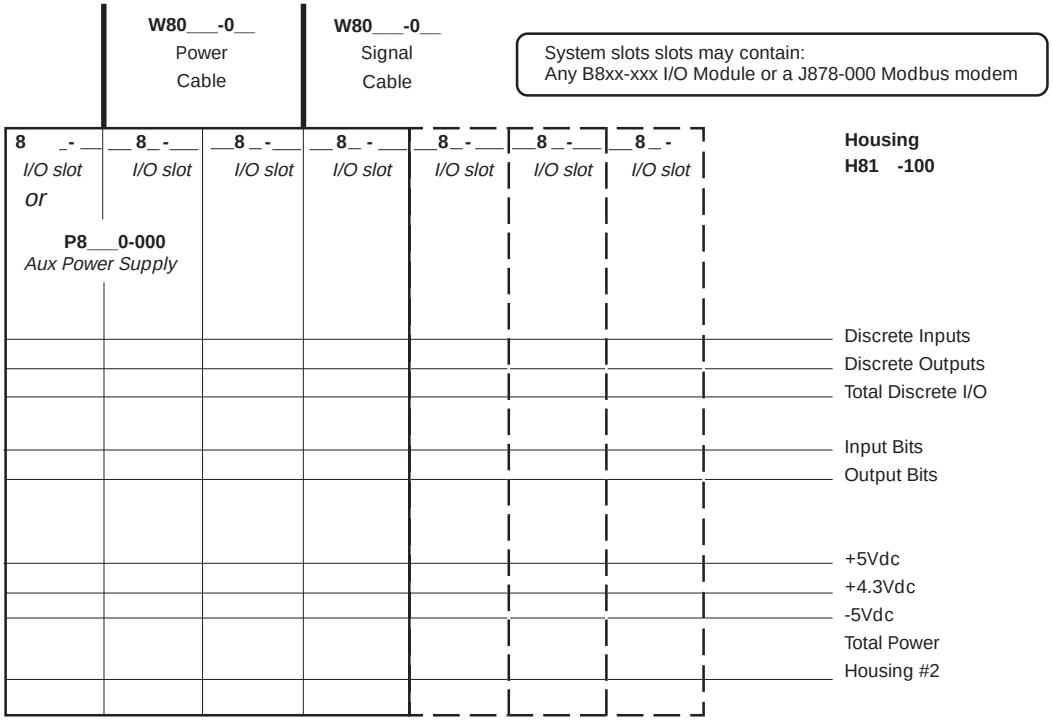

Configuring a Remote I/O System

Remote I/O is the portion of the controller's I/O that is typically installed away from the PLC housing and that requires an interface module to communicate with the I/O processor at the CPU. Communication to the primary housing at each drop is accomplished through coaxial cable. A remote I/O system may consist of single or multiple housings at each drop.

The 984-48x, 685, and 785 series of slot-mount PLCs, and all chassis-mount PLCs (984X, 984A, 984B) can support remote I/O systems.

In a remote I/O configuration, a remote I/O processor in the PLC is connected, via coaxial cable, to a remote I/O interface device at each remote drop. All 984 PLCs that support remote I/O have been designed to control 800-Series I/O at the remote drops. Several option modules and/or field modification kits are available that allow you to control installed bases of 200 and 500-Series I/O at remote drops as well. (See description of S908 RIO processor for 984-685/785, in Controller Option Modules Section.)

S908 Remote Input/Output Processor

All 984 PLCs, except the 38x series, can communicate with remote I/O, a feature facilitated by the S908 communications protocol. This protocol is either built into the mainframe (as in the 984X, 984X, 984B, 984-480, and -485) or added as an optional module (-685, and -785). If you use the S908 with any of the slot mount 685 or 785 series, you must also install an E908-131 or a E908-016 plug-in executive cartridge in the S908.

The S908 Remote Input/Output Processor supports up to 32 drops of remote I/O, depending on the upper limit of the 984 PLC to which it is applied. Each drop can support up to two ASCII devices, depending on the remote input/output interface device at the drop. S908 processors are available with either one or two coaxial cable connectors. (984X, 984-480/485 support single cable only).

The S908 is required for hot standby configurations.

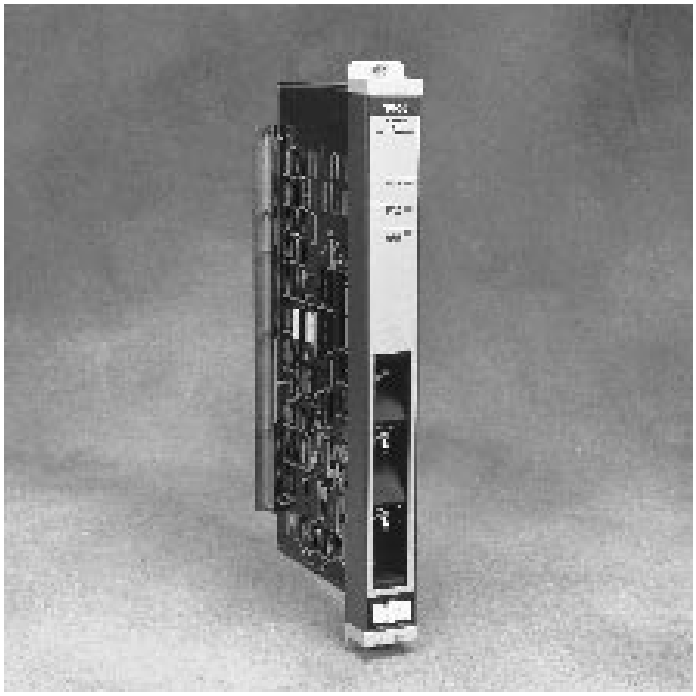

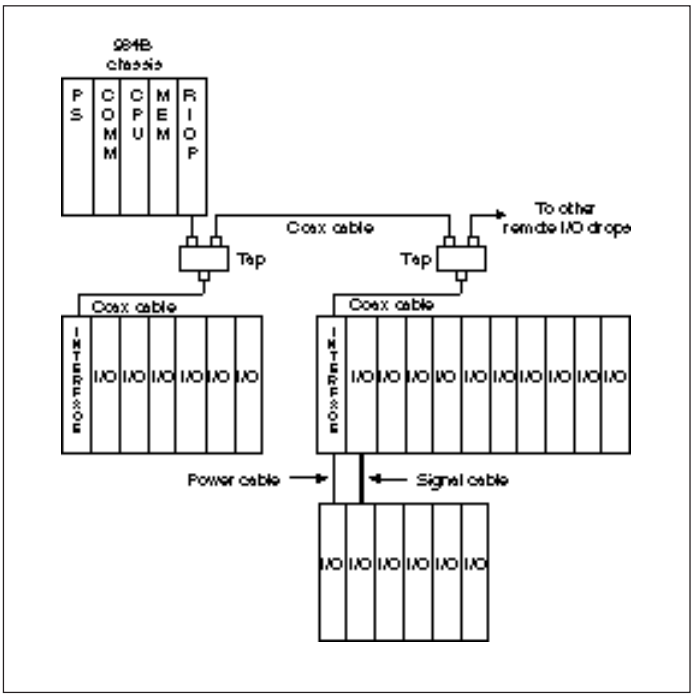

Remote I/O (Redundant Cable)

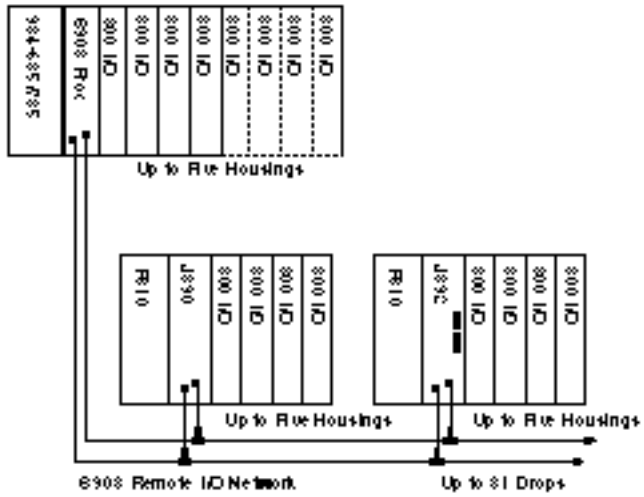

S908 remote input/output processing is designed to support communication with 800 I/O. However, the S908 can also support remote communications with 200 and 500 Series I/O, when you install these field modification kits and remote input/output interfaces:

Modification Kit	Interface	Function
J291 kit	P451 RIO interface	984 w/ 200 Series; no ASCII devices
J290 kit	P453 RIO interface	984 w/ 200 Series; 2 ASCII devices

The S908 can also communicate with the 500 Series I/O through the J290/J291 and a J540 adapter.

984/S911 Redundant Cable Hot Standby System

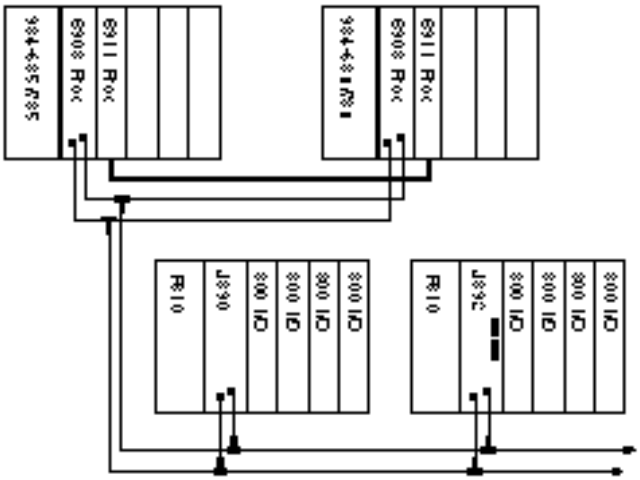

S908 Technical Specifications

Communication Capabilities

Controllers that use S908	
AS-S908-0xx (chassis-mount)	984A, 984B
AS-S908-1x0 (slot-mount)*	984-685/785
Integrated into PLC	984X, 984-48x
Communication Mode	Biphase-level modulation, HDLC message format
Communication Speed	1.544 Mbit/second
Coaxial Cable Connectors	one or two
ASCII Ports	two per drop

Environmental

Operating Temperature	0 ... 60°C
Relative Humidity	0 ... 95% (non-condensing)
Shock Resistance	10G (11ms)

Physical

Space Requirements	
AS-S908-1x0	One option slot in H8xx-209 housing
Weight	
AS-S908-1x0	2.5 lbs (1.2 kg)

*AS-S908-110 Single Cable, AS-S908-120 Dual Cable; both require AS-E908-131 Executive Cartridge.

Remote I/O Cable Recommendations

It is important to plan your system topology before you install the system. Our Application and Service personnel can help you design a system to meet your application requirements. You should consider the following recommendations when planning your cable layout. Your facility may have unique requirements that demand special considerations, so use these recommendations as guidelines only.

Trunk Cables

The trunk cable runs from the PLC to the remote I/O subsystems. Remote I/O communications operate at 1.544 MHz. Standard cable television cables cannot be used to support remote I/O communication. Three types of cable are recommended: RG-6/U coaxial, RG-11/U coaxial, or semirigid.

Use one type of trunk cable throughout the entire remote I/O system. Do not mix cable types. The reflections that occur if signals move from one type of cable to another increase the voltage standing wave ratio (VSWR) in the system. Trunk cables must be terminated with a 75 Ωs cable terminator.

There are limits to the length of the three trunk cable types, as follows:

Cable	Maximum Length
RG-6/U	5,000 ft (1.5 km)
RG-11/U	8,000 ft (2.4 km)
0.5 inch semirigid	15,000 ft (4.5 km)

Modicon RG-6/U Cable, Technical Specifications

The RG-6/U coaxial cable (part #97-5750-000) is a 5/16 inch flexible cable with moderate noise immunity and signal loss; it is used frequently as a drop cable and may be used as a trunk cable in some installations.

Specification	RG-6/U Cable, #97-5750-000
Shield type	Bonded foil quad shield
Minimum bend radius	2.0 in (5 cm)
Capacitance:	16.2 pfd/ft
Attenuation @ 1.544 MHz	0.41 dB/100 ft (1.44dB/100 m)

Modicon RG-11/U Cable, Technical Specifications

The RG-11/U coaxial cable (part #97-5951-000) is a 3/8 inch flexible cable with good noise immunity and low signal loss. It is suitable for use as a trunk cable in most industrial environments and may be used as a drop cable in high noise environments.

Specification	RG-11/U Cable, # 97-5951-000
Shield type	Bonded foil quad shield
Minimum bend radius	2.5 in (6.35 cm)
Capacitance:	16.2 pfd/ft
Attenuation @ 1.544 MHz	0.2 dB/100 ft (.79 dB/100 m)

Semi-rigid Cable

Semi-rigid cable construction is similar to flexible cable construction except that it uses a solid aluminum shield to provide 100% shield coverage. Semi-rigid cable is available in sizes from .5 to 1 inch, with .5 being the most widely used. It has high noise immunity and very low signal loss. Semi-rigid cable may be used as trunk cable when maximum distance and/or high noise immunity are required. Because it is not very flexible, it should not be used as a drop cable.

We recommend a semirigid cable from Comm/Scope Co., Network Cable Division, General Instrument Corporation, P.O Box 1729, 1375 Lenour-Rhyne Blvd., Hickory, NC 28602-1729. Phone: (704) 324-2260.

Isolating High Energy Cable

As a general rule, adjacent high-energy cables should be separated by 12 to 14 inch/kV (30.48 ... 35.56 cm/kV). If they must cross, make sure they cross at right angles.

Running Taps and Drop Cables to the I/O Subsystems

Drops should be located no more than 100 feet (30 m) and no less than 8 ft (2 m) from a trunk cable. Taps should be placed as close as possible to the drop for ease of maintenance. The drop cable need not be the same cable type as the trunk cable. RG-6/U is normally used as the drop cable in systems that use RG-11/U or semirigid trunk cable.

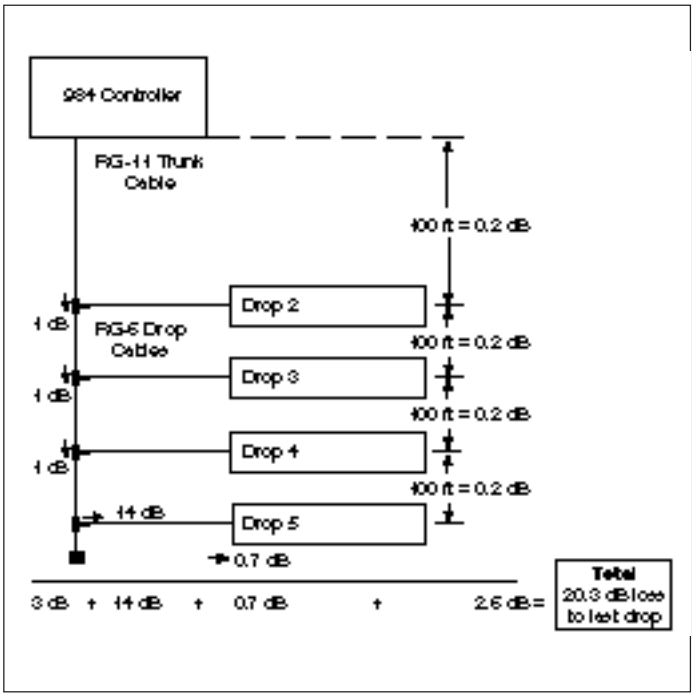

Proper F- and BNC Connections

Most failures in a remote I/O system are the result of bad connections. Some remote I/O products use F-connectors, and others use BNC connectors. Make sure that all connectors are properly crimped and tightened.

Calculating Signal Attenuation

Do not allow attenuation in excess of 35 dB at 1.544 MHz between the remote I/O processor in the PLC and any remote I/O interface at the drop. Working from a carefully detailed outline of your layout plan, you can calculate the expected loss based on length and type of the trunk cable, the number of drops in the system, and whether or not a splitter has been used.

As a first step in planning a control system that uses multiple remote I/O drops, we urge you to generate an installation layout diagram. Start developing the diagram in the early planning stages, when you are making decisions about the PLC and drop locations, then annotate and update it regularly with:

- Estimated cable lengths
- Requirements for taps, terminators, and splitters
- Projected cable routings
- Mounting spaces available
- Alternate routing options

The following table shows the attenuation for the three different cable types:

Cable	Attenuation
RG-6/U	~7 dB/1000 ft (305 m)
RG-11/U	~2 dB/1000 ft (305 m)
0.5 inch semirigid	~0.8 dB/1000 ft (305 m)

If you use splitters, attenuation from center to either side is 6 dB. However, we recommend that you avoid using splitters (except in the case of Hot Standby systems where a splitter is required).

Each RG-6/U drop cable is linked to the RG-11/U trunk cable via a tap. As the signal passes through a tap further down the trunk, the loss per tap is 1 dB. As the signal passes from a tap to the drop to which it is connected, the loss is 14 dB. As the signal passes through the drop cable connector, the loss is 0.7 dB.

Cable Connectors

For optimum system performance, we recommend that you use only one brand of connector throughout the system. Brand mixing can lead to unpredictable system performance.

Modicon F-type Line Tap

Part # MA-0185-100	Technical Specification
Insertion loss	-01 db (max.)
Return loss	-18 dB (min.)
Tap loss	-14 dB (nom.)
Frequency range	0.1 ... 5 MHz
Impedance	75 Ω

Modicon F-type Line Splitter,

Part # MA-0186-100	Technical Specifications
Insertion loss	-6 db (max.)
Return loss	-18 dB (min.)
Frequency range	0.1 ... 5 MHz
Impedance	75 Ω

Modicon Terminators

The following chart identifies Modicon's terminators and their uses.

Part #	Description
60-0513-000	75 Ω in-line terminator for use with the J890/J892 processor
52-0422-000	75 Ω terminator for trunk cables
52-0402-000	75 Ω terminator for drop cables

Modicon Connectors

A series of connectors, installation packs, crimp tools, and blade packs is also available.

Part #	Connector Description	Installation Tool	Crimp Tool	Blade Pack
52-0400-000	RG-6/U Male F Connector	60-0528-000	N/A	60-0529-000
52-0488-000	RG-6/U Male BCN Connector	N/A	0435 09432	N/A
52-0401-000	RG-11/U Male F Connector	60-0530-000	N/A	60-0531-000
52-0399-000	Self Terminating F Connector, for Non-quad Shielded RG-6/U Drop Cables			
52-0411-000	Self-terminating F Connector for RG-6/U Drop Quad Shielded Cables			
MA-0329-001	Type F, Quad cassette, pack of 10			

Remote I/O Cable Topologies

A linear cable run with a tap to each remote drop is the easiest and most reliable topology. We recommend that you use Modicon Rev. C taps with your installation. We also recommend that you avoid the use of splitter configurations unless you have a compelling application need for such a topology.

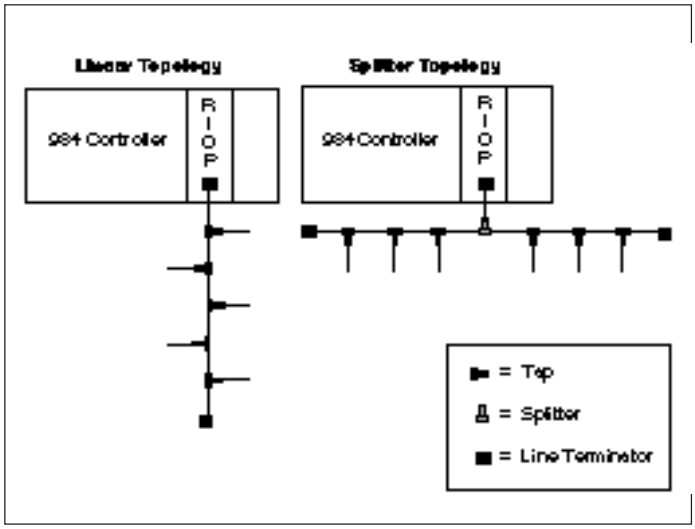

Keep in mind, when you plan a remote I/O layout, that the maximum allowable attenuation loss between the PLC and any remote I/O drop is 35 dB. If you use the single cable mode and you want to service a large number of remote drops, you may be forced to use a splitter.

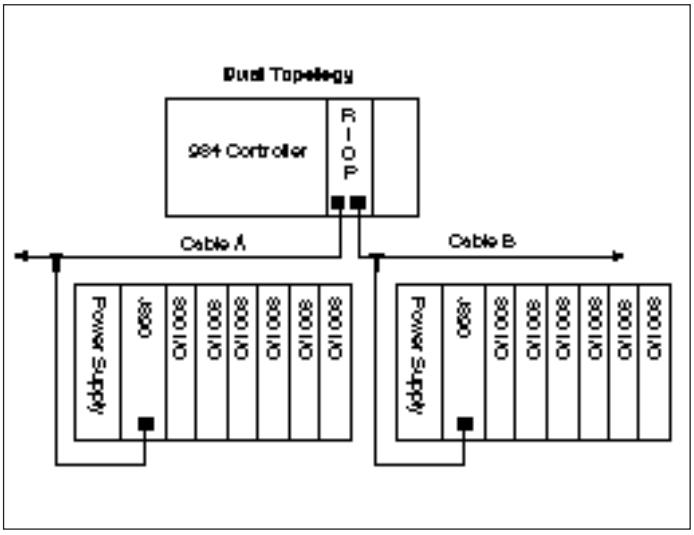

Several 984 PLCs have optional remote I/O processors that provide two remote I/O cable port connectors, allowing you to implement dual and redundant cabling strategies.

In dual mode, two trunk cables are run along separate routes to different sets of remote I/O drops. The dual mode of cabling allows you to support multiple remote I/O drops (up to 32 depending on the PLC) without having to balance cable on two sides of a splitter.

In redundant mode, the two trunk cables are run on parallel paths to the same series of remote I/O drops. The redundant cable mode, using a two-port RIO Processor, provides your system with additional communications integrity. Because two cables are run to each drop, a redundant cabling strategy also requires two RIO cable ports on the interface module at each remote I/O drop.

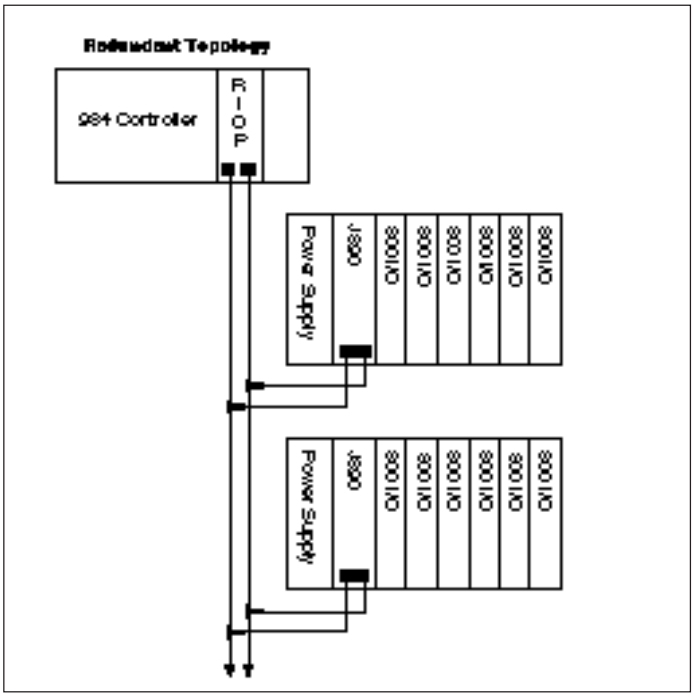

The following tools are designed to help you configure 800 Series remote I/O systems. Refer to the following configuration pages associated with the remote I/O interface you have chosen.

1. P890 or P892 remote drop in H810-208 four-slot housing.
2. P890 or P892 remote drops in H810, H819 or H827-209 housings.
3. J890 or J892 remote I/O drops.

INTERFACE

	Cable	ASCII
AS-P890-001	Single	N/A
AS-P892-001	Single	2

POWER SUPPLIES

		Supply Voltage	+5VDC (mA)	+4.5VDC (mA)	–5VDC (mA)	Total Power
Secondary	AS-P890-001 AS-P892-001	120 VAC 240 VAC 24 VDC	3000	3000	250	3000

Each interface listed includes a 3000mA power supply (see table). **Power requirements for housing #1 (primary) must not exceed any of the limitations shown.**

To use this configuration sheet:

- ☐ Select the components shown on opposing page, within the guidelines above.
- ☐ The catalog numbers in the shaded boxes comprise your bill of material.
- ☐ Configure any remote I/O drops required (984-480/485).

Rules for Drop Configurations:

- ☐ A maximum of one housing can be configured per drop if using the H10-208.

H810-208 Configuration (Remote I/O) (P890/P892)

System Number _____

(page)

Configuration 2 I/O Drop

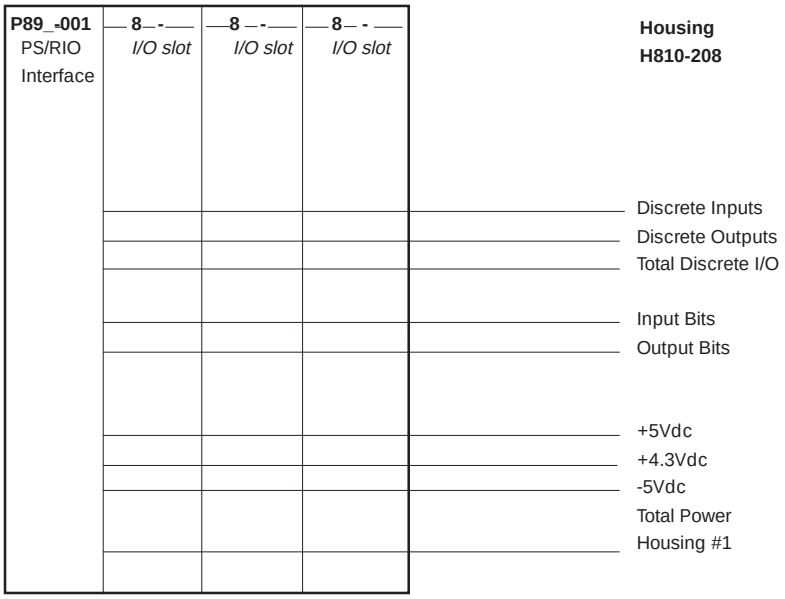

I/O slots may contain:
Any B8xx-xxx I/O Module or a J878-000 Modbus modem

INTERFACE

	Cable Topology	ASCII Ports
AS-P890-001	Single	N/A
AS-P892-001	Single	2

HOUSINGS

	Primary	Secondary
10 inch (4 slots)	AS-H810-208 AS-H810-209	N/A AS-H810-100
19 inch (7 slots)	AS-H819-209	AS-H819-100
27 inch (11 slots)	AS-H827-209	AS-H827-100

The first housing in a local I/O system must be primary, the remaining housings, secondary.

CABLES

		1.5 ft.	5.0 ft.	6.0 ft.	8.0 ft.	12.0 ft.
Power						
	W/O Aux. P.S.	AS-W808-002	AS-W808-005	N/A	AS-W808-008	AS-W802-012
	W/Aux. P.S.	AS-W804-002	AS-W804-005	N/A	N/A	AS-W804-012
Signal		AS-W801-002	N/A	AS-W801-005	N/A	AS-W801-012

If secondary housings are used, signal and power cables are required.

Note: Different power cables are used for systems with and without aux. power supplies.
Choose the length required.

POWER SUPPLIES

		Supply Voltage	+5VDC (mA)	+4.3VDC (mA)	–5VDC (mA)	Total Power
Auxiliary	AS-PS10-000	120 VAC 240 VAC	5000	5000	300	10300
	AS-PS30-000	120 VAC 240 VAC 24 VDC	5000	6000	500	6000

Power requirements for housing #1 (primary) must not exceed any of the limitations shown.

If total system power requirements exceed CPU's internal power supply capability, an auxiliary power supply must be added in slot 1 of the next secondary housing.

To use this configuration sheets
- Select the components shown on opposing page, within the guidelines above.
- The catalog numbers in the shaded boxes comprise your bill of material.

Rules for Drop Configurations:
- Maximum allowable I/O configuration is 32 modules, 5 housings.
- Recommended total length of cabling between first and last housing is 20 feet.
- Expansion to fifth housing addresses up to 32nd I/O slot when 19" housings are used with prior configuration.

P890/P892 Remote Drop Configuration

System Number _____

(page)

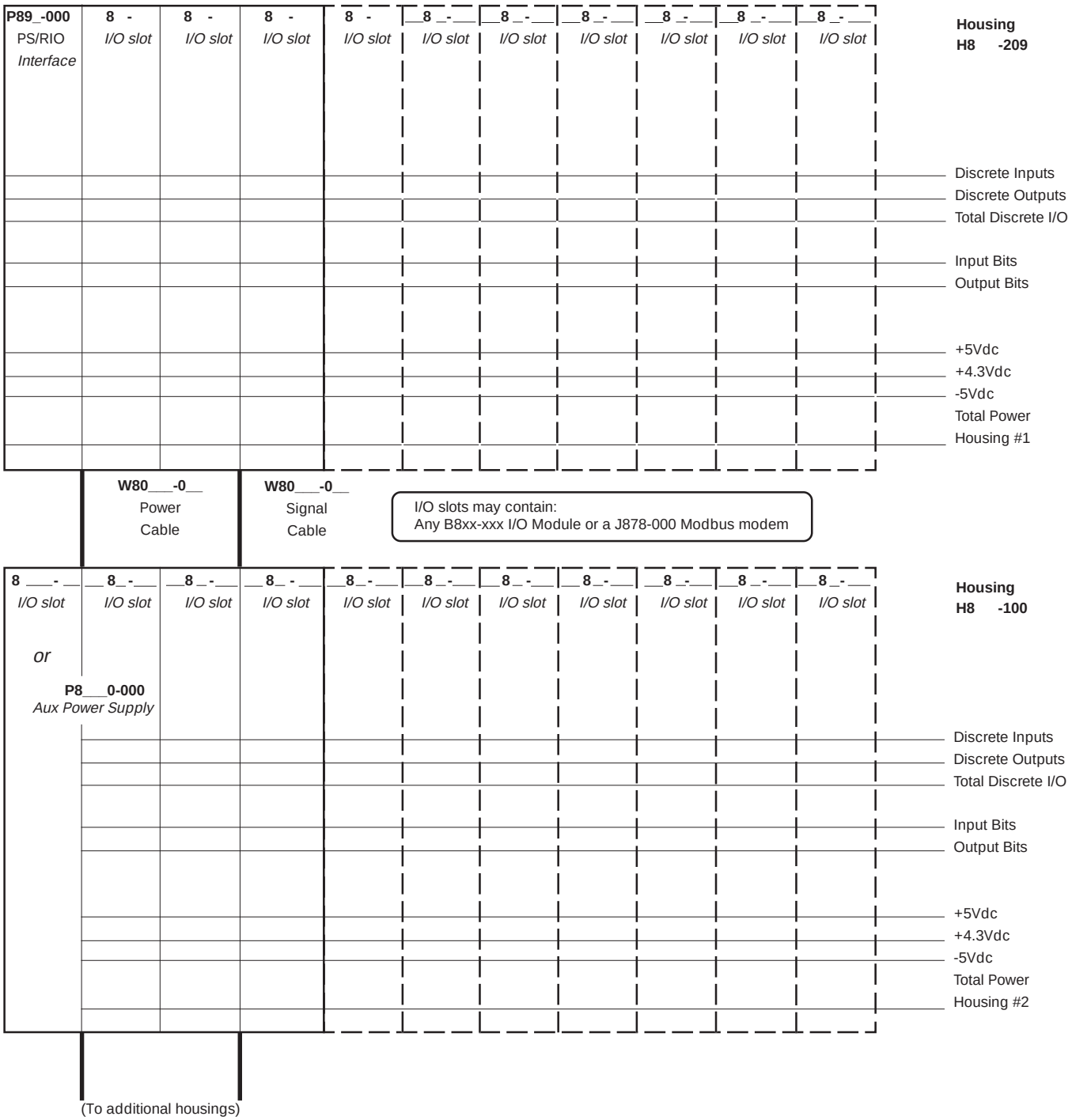

P890/P892 Remote Drop Configuration

System Number _____

(page)

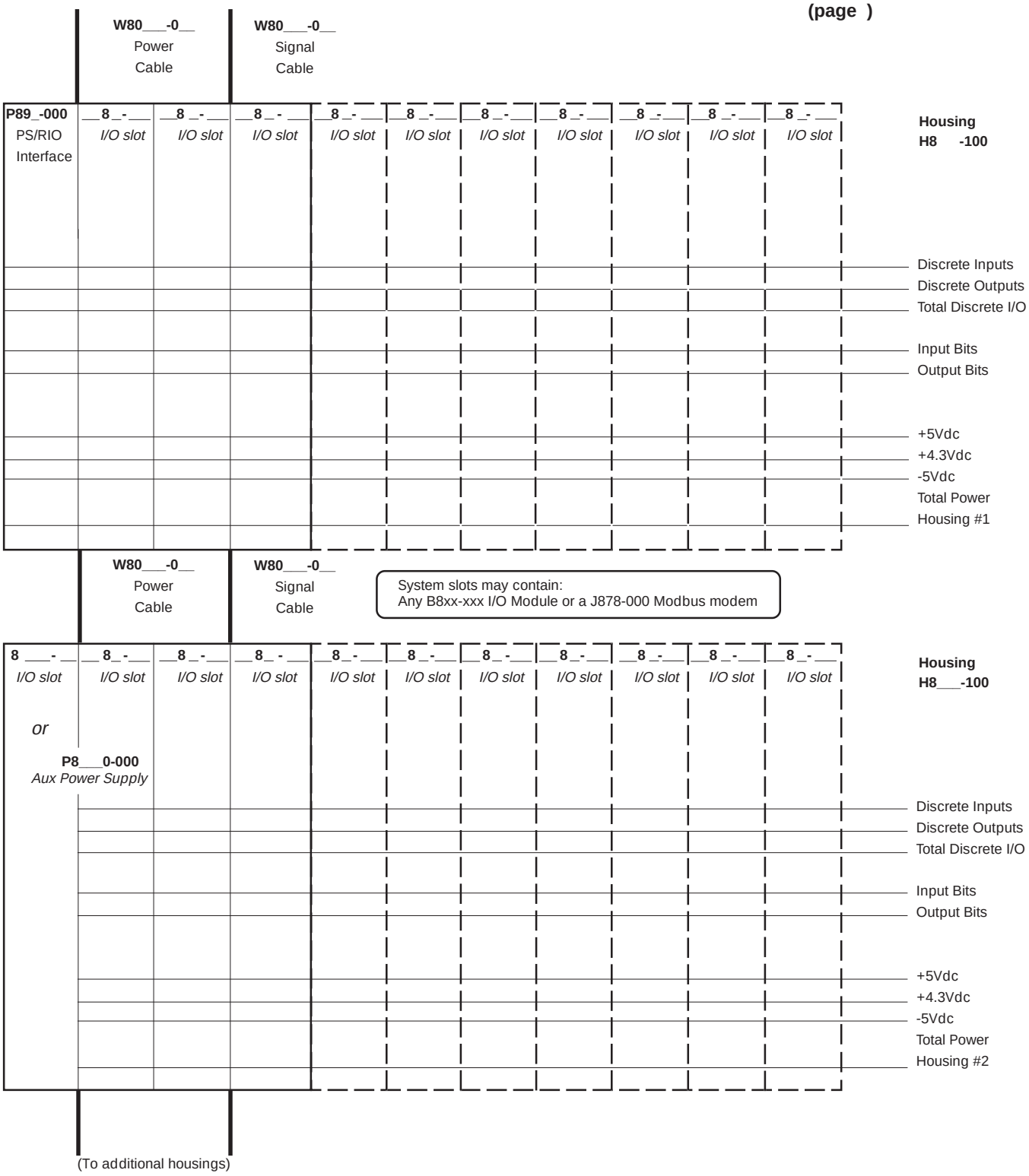

P890/P892 Remote Drop Configuration

System Number _____

(page)

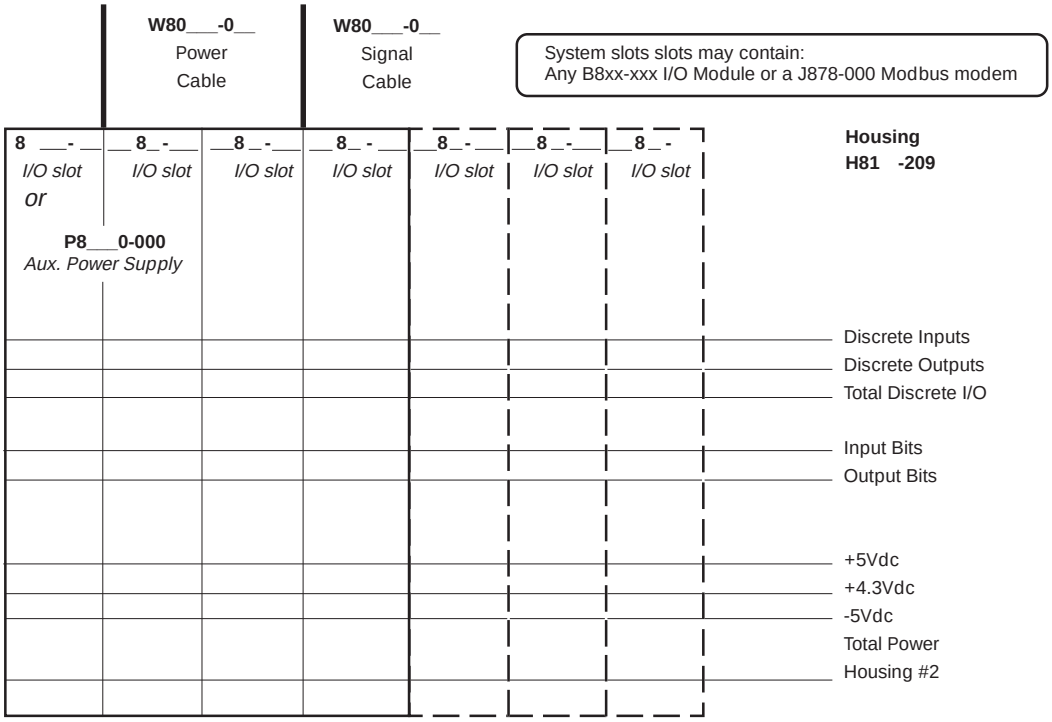

INTERFACE

	Cable Topology	ASCII Ports
AS-J890-101	Single	N/A
AS-J890-102	Dual	N/A
AS-J892-101	Single	2
AS-J892-102	Dual	2

HOUSINGS

	Primary	Secondary
10 inch (4 slots)	AS-H810-208 AS-H810-209	N/A AS-H810-100
19 inch (7 slots)	AS-H827-103	AS-H819-100
27 inch (11 slots)	AS-H819-103	AS-H827-100

The first housing in a local I/O system must be primary, the remaining housings, secondary.

CABLES

		1.5 ft.	5.0 ft.	6.0 ft.	8.0 ft.	12.0 ft.
Power						
	W/O Aux. P.S.	AS-W808-002	AS-W808-005	N/A	AS-W808-008	AS-W802-012
	W/Aux. P.S.	AS-W804-002	AS-W804-005	N/A	N/A	AS-W804-012
Signal		AS-W801-002	N/A	AS-W801-005	N/A	AS-W801-012

If secondary housings are used, signal and power cables are required.

Note: Different power cables are used for systems with and without aux. power supplies.
Choose the length required.

POWER SUPPLIES

		Supply Voltage	+5VDC (mA)	+4.3VDC (mA)	–5VDC (mA)	Total Power
Primary or Auxiliary	AS-PS10-000	120 VAC 240 VAC	5000	5000	300	10300
Aux. Only	AS-PS30-000	120 VAC 240 VAC 24 VDC	5000	6000	500	6000

Power requirements for housing #1 (primary) must not exceed any of the limitations shown.

If total system power requirements exceed CPU's internal power supply capability, an auxiliary power supply must be added in slot 1 of the next secondary housing.

* A Primary power supply is required to power a J890/J892 RIO interface.

To use this configuration sheet:
- Select the components shown on opposing page, within the guidelines above.
- The catalog numbers in the shaded boxes comprise your bill of material.

Rules for Drop Configurations:
- Maximum allowable I/O configuration is 32 modules, 5 housings.
- Bits/drop must not exceed CPU limitations (see CPU specification sheet).
- Recommended total length of cabling between first and last housing is 20 feet.
- Expansion to fifth housing addresses up to 32nd I/O slot when 19" housings are used with prior configuration.

J890/J892 Remote Drop Configuration

System Number _____

(page)

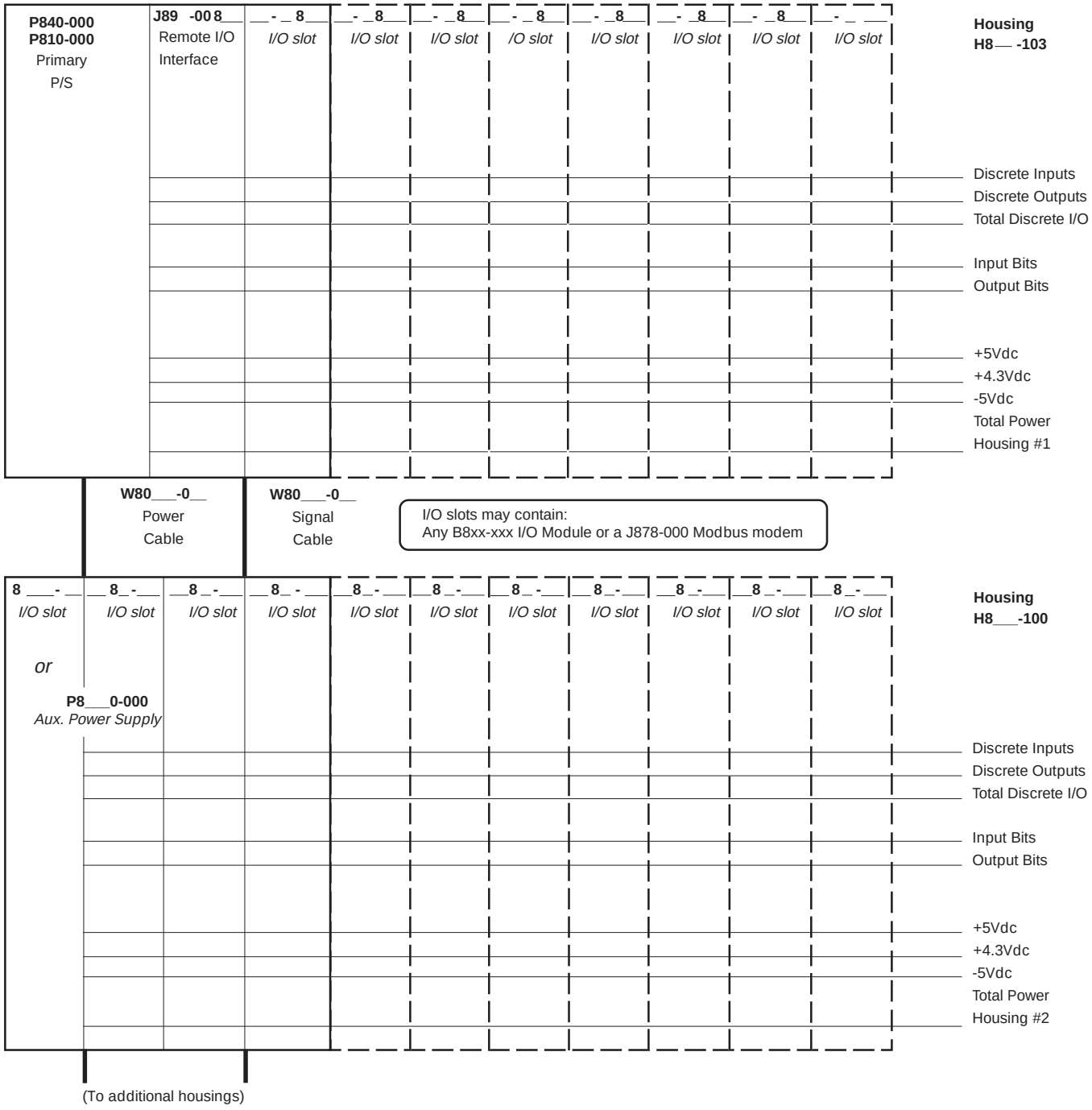

J890/J892 Remote Drop Configuration

System Number _____

(page)

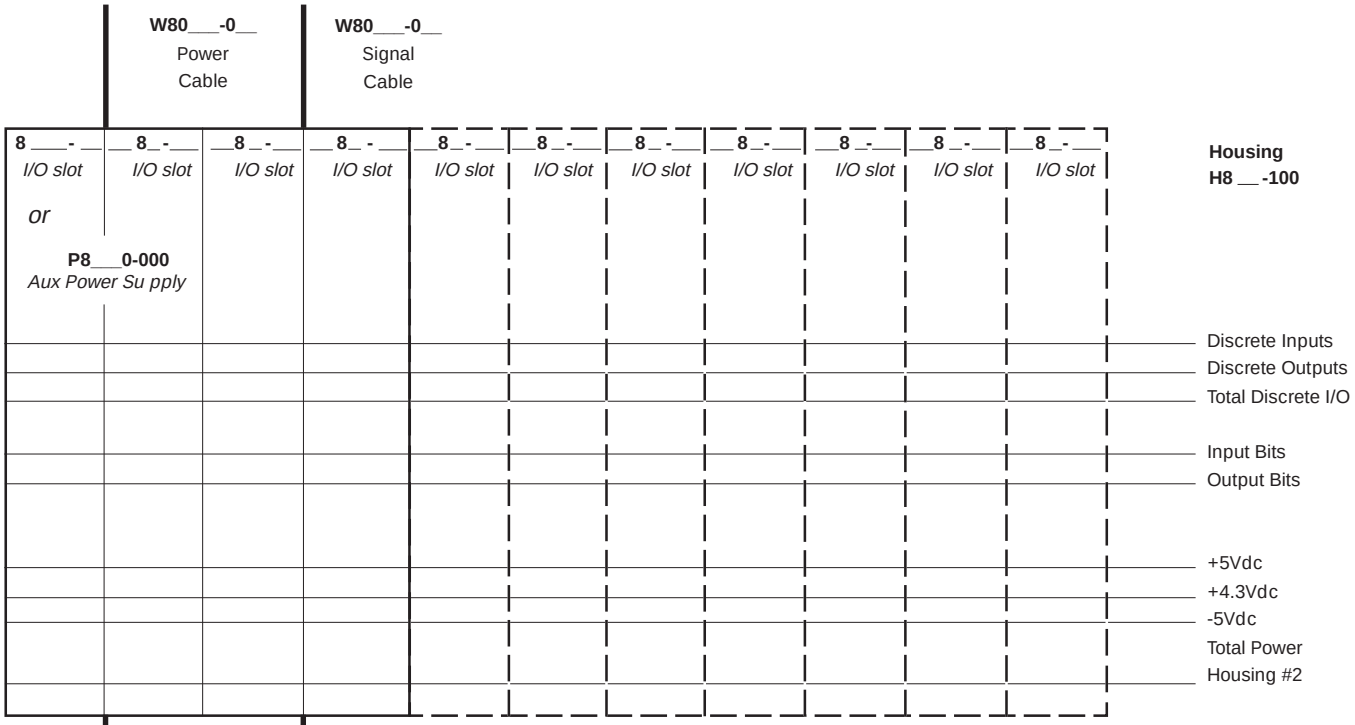

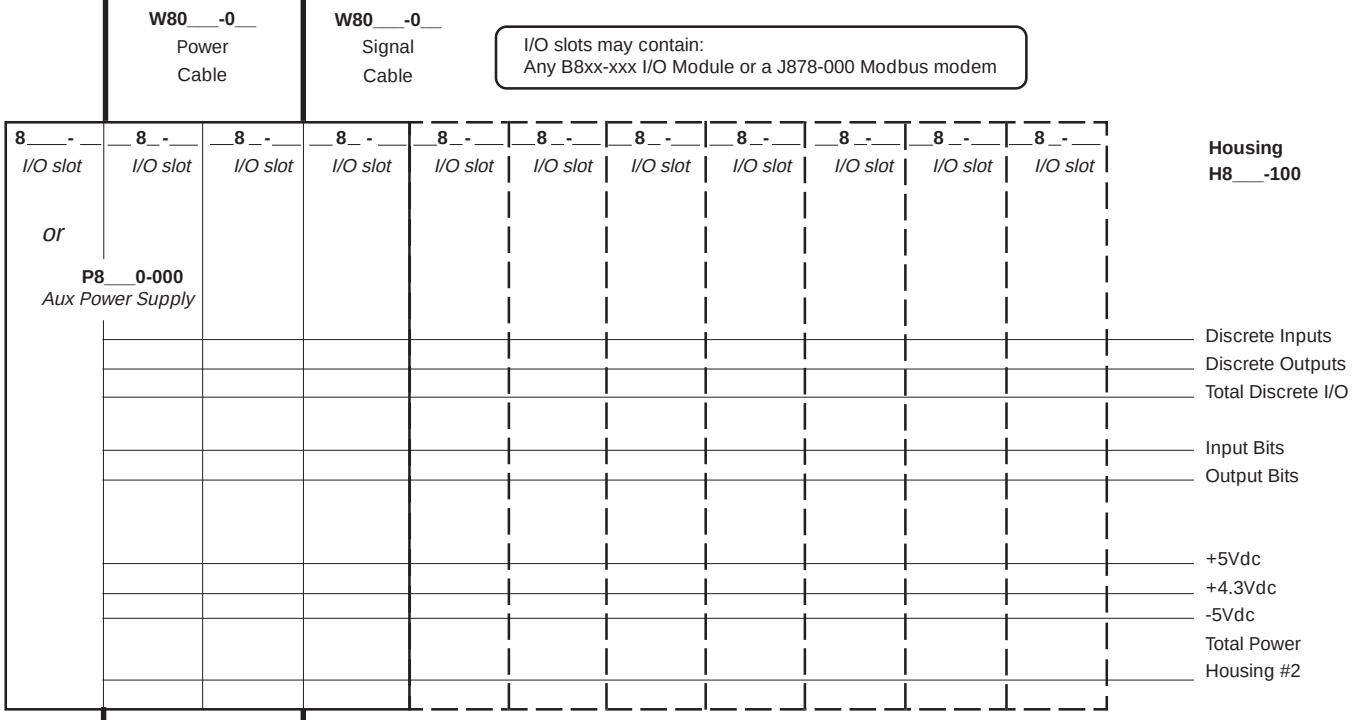

J890/J892 Remote Drop Configuration

System Number _____

(page)

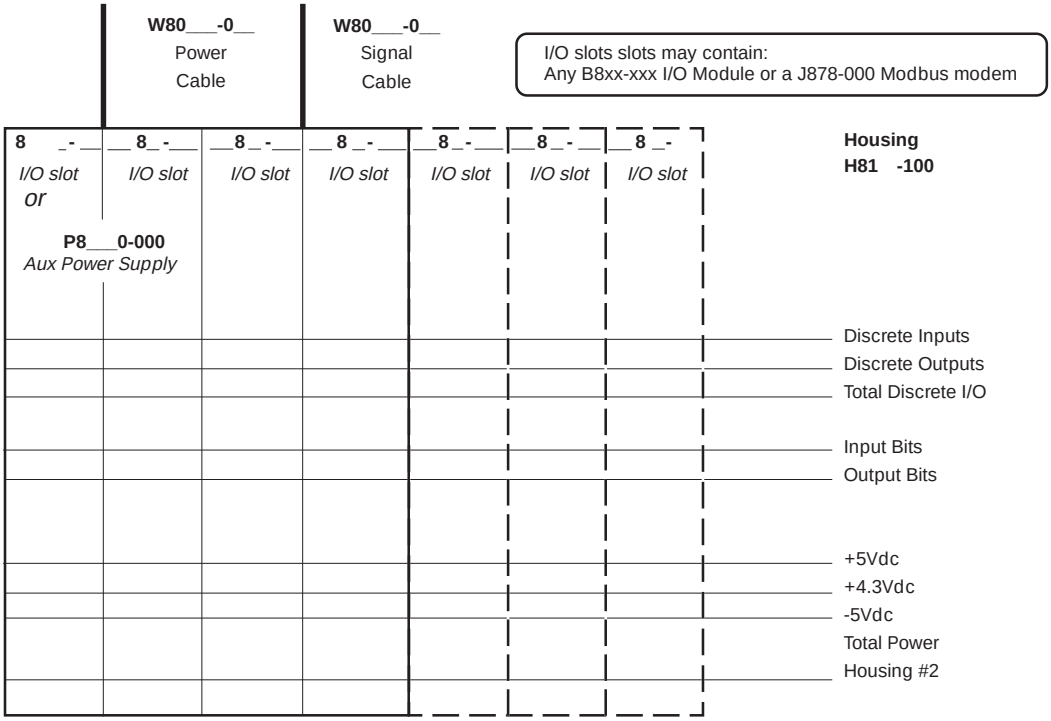

Notes